Operating Instructions

Swing door

MHTM™ FlowMotion®

mSwing

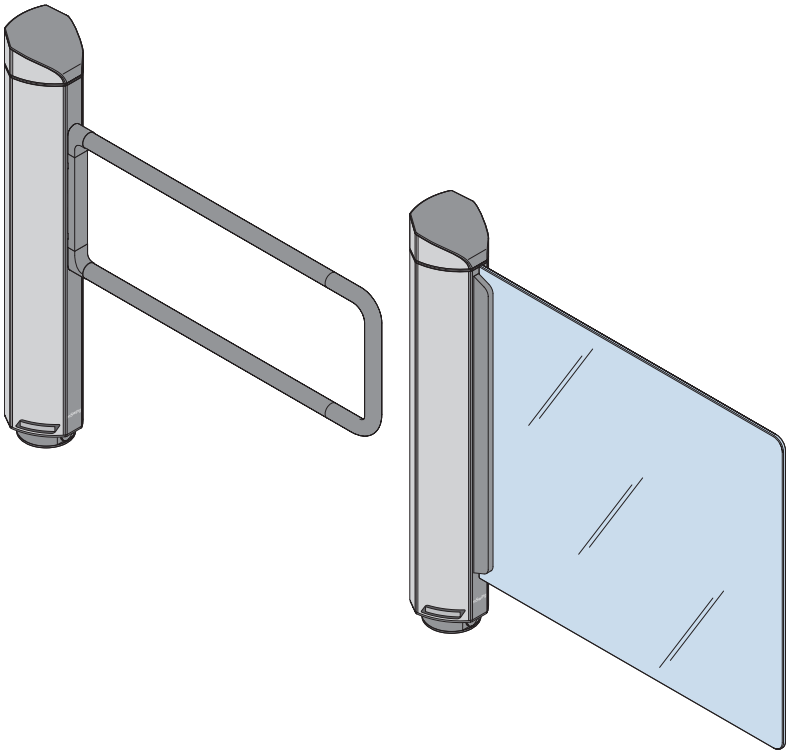

Doc.ID: 5817,0032EN
Version 00

MAGNETIC AUTOCONTROL GMBH
Grienmatt 20
D-79650 Schopfheim
Germany

Phone +49 7622 695 5
Fax +49 7622 695 802
info@magnetic-germany.com
www.magnetic-access.com

Contents

1 Notices on the document 7
1.1 Purpose and contents of this operating instructions 7
1.2 Read and store the operating instructions 7
1.3 Non-compliance with the operating instructions 8
1.4 Symbols and illustrations used in these operating instructions 8
1.4.1 Warning notices and notices 8

2 Safety 10
2.1 Intended use 10
2.2 Changes and modifications 10
2.3 Target groups 11
2.3.1 Operator and his responsibilities 11
2.3.2 Personnel - activities and qualifications 12
2.4 Personal protective equipment 13
2.5 Symbols on the device 14
2.6 For your safety 15
2.7 To protect the environment 16
2.8 Emergency opening of the pedestrian gate 16

3 Technical data 17
3.1 Dimensions and design 17
3.1.1 mSwing with wing FMSW_MG 17
3.1.2 mSwing with bracket FMSW_MU 19
3.2 Clearances 20
3.3 Swivel range and required mounting width 21
3.3.1 mSwing with wing FMSW_MG 21
3.3.2 mSwing with bracket FMSW_MU 22
3.4 Electrical connection 23
3.5 Operating conditions 23
3.6 Emissions 23
3.7 Control unit MGC 24

4 Design and function 25
4.1 Design of the mSwing with wing FMSW_MG 25
4.2 Design of the mSwing with bracket FMSW_MU 26
4.3 Function 27
4.4 Definition of "left" and "right" 28

5 Receipt of goods, transport and storage 29
5.1 Goods receiving department 29
5.2 Safety during transport 29
5.3 Transport 30
5.4 Storage 31

6 Unpacking, scope of delivery and identification 32
6.1 Unpacking 32
6.2 Scope of delivery 33
6.3 Identification 34
6.3.1 Type plate 34

7 Installation and assembly 35
7.1 Safety during installation and assembly 35
7.2 Mounting variants 36
7.3 Required steps 37
7.4 Setting up foundation and placing empty conduits 38
7.4.1 Requirements foundation 38
7.4.2 Requirements empty conduits 38
7.4.3 Thread the lines into the floor ring via cable screw connections 39
7.4.4 Setting up foundation and placing empty conduits 40
7.4.5 Foundation and empty conduit plan and reinforcement 40
7.5 Set mSwing position 41
7.5.1 Determining the orientation of the blocking element 41
7.6 Preparing the mSwing for mounting 43
7.7 Mounting the floor plate 45
7.7.1 Mounting variant "Direct mounting" 45
7.7.2 Mounting variant "Mount base plate" 49
7.7.3 Mounting variant "Glue base plate" 56
7.7.4 Mounting variant "Glue floor plate" 60
7.7.5 Mounting variant "plates or interlocking stones" 65

7.8 Assembly of the mSwing 67
7.9 Adjusting the end stops 71
7.9.1 Explanations of mechanical end stops 71
7.9.2 Adjusting the end stops 71
7.9.3 Factory setting and example for another setting 72
7.9.4 Adjusting the fixed end stops (gross adjustment) 73
7.9.5 Adjusting the following end stops (precise adjustment) 74
7.10 Mounting and dismounting the blocking element 75
7.10.1 Mounting the blocking element "Wings" 75
7.10.2 Dismounting the blocking element "Wings" 77
7.10.3 Mounting the blocking element "Bracket" 78
7.10.4 Dismounting the blocking element "Bracket" 81
7.11 Opening and closing the housing 82
7.12 Checking the assembly 82

8 Electrical connection 83
8.1 Safety during electrical connection 83
8.2 Installing electrical protective devices 84
8.3 Connecting the mains cable 85
8.4 Connecting customer control lines 86
8.4.1 Connecting emergency opening contacts 87
8.5 Checking the electrical connections 87

9 Commissioning 88
9.1 Safety during commissioning 88
9.2 Putting the pedestrian gate into operation 88
9.3 Switching the pedestrian gate on and off 88
9.4 Parameterising the pedestrian gate 89

10 Test book 89

11 Operation 90

12 Cleaning and maintenance 90
12.1 Cleaning the pedestrian gate 90
12.2 Maintenance schedule 91

13 Corrective action 91

14	**Spare parts and repair**	**92**
15	**Customer service**	**92**
16	**Decommissioning**	**93**
	16.1 Safety during decommissioning	93
	16.2 Take the pedestrian gate out of operation	93
17	**Disassembly and disposal**	**94**
	17.1 Safety during disassembly and disposal	94
	17.2 Dismantling and disposing of the pedestrian gate	94
18	**EU-Declaration of Conformity**	**95**

1 Notices on the document

1.1 Purpose and contents of this operating instructions

These operating instructions provide all the information required for the product in the various phases of its life cycle.

These operating instructions contains the following information: Assembly and function, transport and storage, unpacking and delivery, installation and assembly, electrical connection, commissioning, operation, cleaning and maintenance, decommissioning, dismantling and disposal.

IMPORTANT!

For parameterisation see separate document "Description of MGC control unit for mSwing (Doc.ID: 5817,0031)".

1.2 Read and store the operating instructions

Pre-requisite for safe working is the observance of all specified safety notes, warning notes and instructions. In addition, the local accident prevention regulations, general safety regulations and local environmental regulations applicable to the area of application of the product must be observed.

Carefully read these operating instructions before starting any work! The operating instructions are a product component and must be kept in direct proximity of the product, well accessible to the personnel at all times.

If the product is passed on to third parties, please also provide these operating instructions.

1.3 Non-compliance with the operating instructions

Magnetic declines all liability for personal injury and material damage caused by not observing the operating instructions.

This applies in particular to damage caused by:

- Non-intended use
- Use of non-qualified personnel
- Use of non-approved components
- Unauthorised modifications
- Inappropriate assembly and installation
- Improper operation
- Defective or unperformed maintenance and repairs
- Use of non-approved spare parts
- Operation of a faulty product

1.4 Symbols and illustrations used in these operating instructions

1.4.1 Warning notices and notices

Warning notes are characterised by pictograms in these operating instructions. A warning note starts with a signal word that expresses the extent of the hazard.

It is absolutely essential to observe the warning notes and to proceed with caution in order to prevent accidents as well as bodily injuries and property damage.

Warning Notes

⚠ DANGER	
⚠	The signal word DANGER points to an immediately dangerous situation, which leads to death or severe injuries if it is not avoided.

⚠ WARNING	
⚠	The signal word WARNING points to a potentially dangerous situation, which can lead to death or severe injuries if it is not avoided.

⚠ CAUTION	
	The signal word CAUTION points to a potentially dangerous situation, which can lead to minor injuries if it is not avoided.

NOTICE	
	The signal word NOTICE points to a potentially harmful situation, which leads to property damage if it is not avoided.

Notes and recommendations

IMPORTANT!

The signal word IMPORTANT highlights useful notes and recommendations as well as information for an efficient and trouble-free operation.

2 Safety

2.1 Intended use

The Magnetic swing door mSwing is designed for the controlled passage of persons who wish to enter or leave a restricted area. The swing door is also suitable for persons who cannot pass through other types of pedestrian gates such as turnstiles safely, quickly or without assistance. Such persons include, for example, small children, elderly people or people with disabilities.

The swing door can be used as a supplement to pedestrian gates such as the turnstile.

Children under 14 years of age may only pass through the swing door under the supervision of an adult.

The swing door may only be mounted on non-flammable floors.

The swing door may only be operated within the temperature range indicated on the type plate.

Misapplications

Any other or further use is considered improper use. Magnetic is not liable for any resulting personal injury or damage to property.

For example, the following applications are considered to be contrary to regulations:

› Mounting the swing door on a flammable floor.

2.2 Changes and modifications

Changes or modifications to the product, attachments or components may result in unforeseen hazards. Before making any technical changes or modifications to the product of any of the components, written permission must be obtained from Magnetic.

2.3 Target groups

2.3.1 Operator and his responsibilities

The operator must comply with the statutory obligations regarding work safety. In addition to the safety instructions and warning notes in these operating instructions, the valid safety, accident prevention and environmental protection regulations must be observed.

In particular, the operator must:

- determine additional danger in a danger analysis
- implement the necessary behavioural requirements in work instructions for operation with the product at the operating location
- regularly verify throughout the product time of use that the work instructions drawn up by him comply with the current state of the regulations
- adapt the work instructions to any new provisions, standards and usage conditions - where required.
- clearly regulate the responsibilities for all work on the product and with the product such as installation, commissioning, operation, cleaning, maintenance, etc.
- that the personal protective equipment is worn
- ensures that all employees who work with the product or on the product have read and understood the operating instructions.

Furthermore, the operator must train personnel regarding the use of the product at regular intervals and provide information on possible dangers.

Furthermore, the operator is responsible for:

- the product is always in perfect technical condition.
- the product is maintained at specified maintenance intervals
- the product is only operated within the permitted temperature range.

The operator is also responsible that the danger area of the product cannot be accessed by any unauthorised persons under any circumstances.

2.3.2 Personnel - activities and qualifications

Only authorised, trained and sufficiently qualified personnel may work on and with the product. The personnel must know and understand the operating instructions and the required operating instructions.

Designation	Qualification
Transport equipment operator	› Has professional experience as a transport equipment operator or warehouse and transport worker. › Has a valid driving licence for the required industrial truck, e.g. forklift. › Knows the necessary regulations. › Can assess the work assigned to her/him, recognises possible dangers and take suitable safety measures.
Technician	› Has completed training as a plant mechanic, plant fitter, assembly mechanic, assembly fitter or has a comparable technical education. › Has completed training as an electrical safety expert. › Has additional knowledge and experience. › Knows the associated technical terms and regulations. › Can assess the work assigned to her/him, recognises possible dangers and take suitable safety measures.
Magnetic MHTM™ FlowMotion® service expert	› Meets all requirements of the technician. › Trained and authorised by Magnetic.
Operator	› Trained by the operator.

Table 1: Qualifications of personnel

Action	Transport equipment operator	Technician	Magnetic service expert	Operator
Transporting	X	X	–	–
Unpacking	X	X	X	–
Laying the foundation	–	X	–	–
Assembly	–	X	X	–
Electrically connect	–	X	X	–
Parameterise	–	X	X	–
Commissioning [1)]	–	X	X	–
Operating	–	X	X	X
Cleaning	–	X	X	X
Waiting	–	X	X	–
Rectify faults	–	X	X	–
Repairing	–	X	X	–
Decommissioning	–	X	X	–
Disassemble	–	X	X	–
Dispose	–	X	–	–

1) According to the supplied test book MHTM™ FlowMotion® mSwing

Table 2: Activities and qualifications

2.4 Personal protective equipment

It is necessary to wear personal protective equipment when dealing with the product so as to minimise health hazards.

Before carrying out any work, properly dress in the necessary protective equipment such as work clothes, protective gloves and safety shoes and wear during work.

2.5 Symbols on the device

Warning of dangerous electrical voltage!

The warning sign indicates hazardous areas with dangerous electrical voltage. Non-observance of the warning signs causes severe injuries or death. The work to be carried out may only be carried out by a qualified electrician or an electric safety expert.

This warning sign is fixed at the following point:

› On the reinforcing plate under the outer tube.

Risk of hand injuries!

The warning sign indicates hazardous areas with crushing danger. Non-observance of the warning sign may cause crushing injuries to hands or fingers.

This warning sign is fixed at the following point:

› Below the hood.

2.6 For your safety

Mortal danger by electric voltage!

Touching live parts can be lethal. Damaged insulation or damaged parts may be fatal.

- If the insulation or any parts are damaged, switch off the power supply at once and initiate repair.
- Only qualified electricians or electrical safety experts may work on the electrical system.
- Switch off power supply and secure against re-activation before performing any work. Test for absence of voltage.
- Perform electrical installation in accordance with the applicable regulations.
- Install protective devices that are prescribed by national regulations, such as e.g. residual current circuit breakers. These protective devices must be provided by the customer.
- Observe the information on the type plate.
- Close all covers after work has been carried out.
- Keep moisture and dust away from live parts. Penetrating moisture and dust can lead to a short circuit.
- If the electrical connection is made during precipitation, e.g. rain or snow, prevent the penetration of moisture by means of suitable protective covers.
- During or after a lightning strike into the system, there is danger to life if the components are touched or during a stay in the immediate vicinity of the system. When installing outdoors, do not install and mount the pedestrian gate during thunderstorms.

2.7 To protect the environment

Improper disposal!

Improper disposal can lead to damage to the environment.

- Dispose of product in accordance with local and national laws and regulations.
- Sort resources and supply them to recycling.

2.8 Emergency opening of the pedestrian gate

↗ Page 87, chapter 8.4.1.

3 Technical data

3.1 Dimensions and design

3.1.1 mSwing with wing FMSW_MG

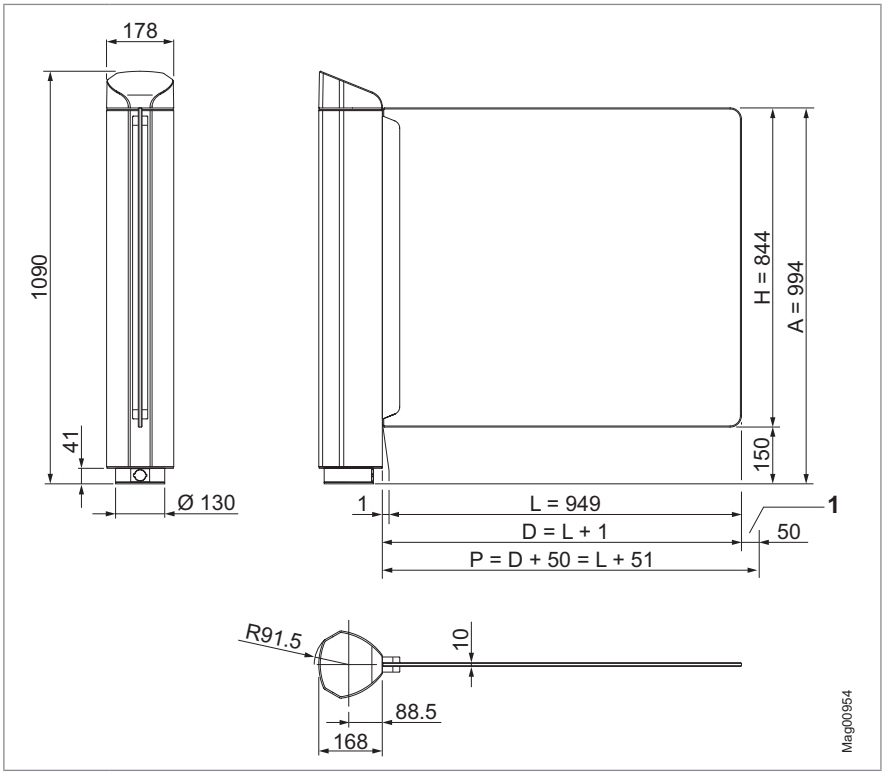

Fig. 1: Dimensions mSwing with wing MWSW-MG (dimensions in mm)
A, H and L are standard dimensions

1 Minimum distance between blocking element and a fixed object

A Distance floor – top edge of blocking element

D Blocking width

H Blocking element height

L Blocking element length

P Passage width

Designation	Value
Dimensions	› Circumference diameter: 138 mm › Total height: 1090 mm ↗ Page 17, Fig. 1 and ↗ Page 21, Fig. 4.
Passage width	› Min. 550 mm › Max. 1000 mm
Weight	› Swing door without wings: approx. 35 kg › Wing: 20 kg (standard wing) to 40 kg (special wing)
Material	› Housing: Aluminium › Hood: mDure › Wing: ESG or polycarbonate

Table 3: Dimensions and design – mSwing FMSW_MG

3.1.2 mSwing with bracket FMSW_MU

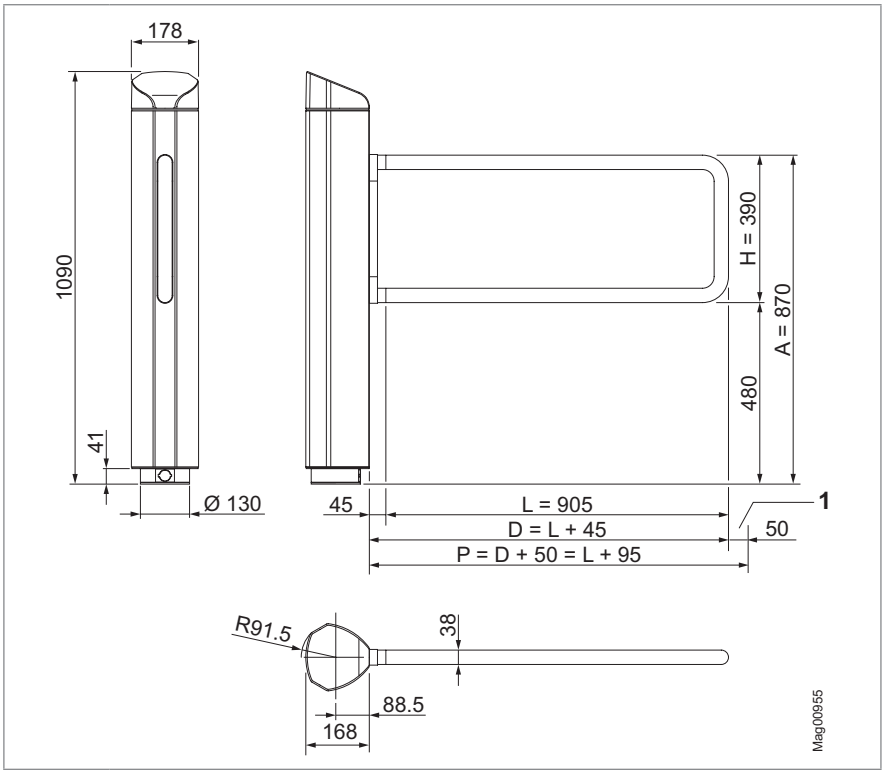

Fig. 2: Dimensions mSwing with bracket FMSW_MU (dimensions in mm)
A, H and L are standard dimensions

2 Minimum distance between blocking element and a fixed object

A Distance floor – top edge of blocking element

D Blocking width

H Blocking element height

L Blocking element length

P Passage width

Designation	Value
Dimensions	› Circumference diameter: 183 mm › Total height: 1090 mm ↗ Page 19, Fig. 2 and ↗ Page 22, Fig. 5..
Passage width	› Min. 550 mm › Max. 1800 mm
Weight	› Swing door without bracket: 35 kg › Bracket: 3 kg (standard bracket) to 6 kg (special bracket)
Material	› Housing: Aluminium › Hood: mDure › Bracket: Stainless steel (uncoated or black)

Table 4: Dimensions and design – mSwing FMSW_MU

3.2 Clearances

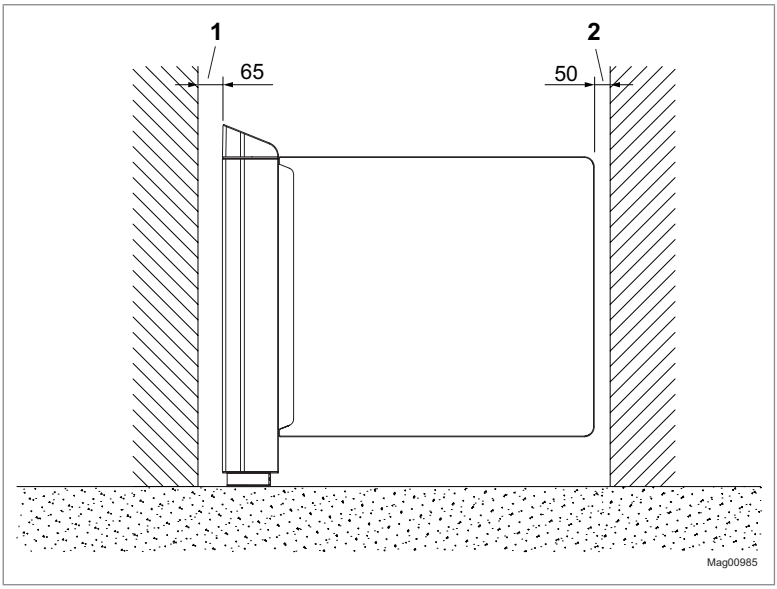

Fig. 3: mSwing clearances to be maintained, displayed here is mSwing with wing

1 Minimum distance between outer tube and a fixed object

2 Minimum distance between blocking element and a fixed object

3.3 Swivel range and required mounting width

3.3.1 mSwing with wing FMSW_MG

There must be no obstacles in the swivel range.

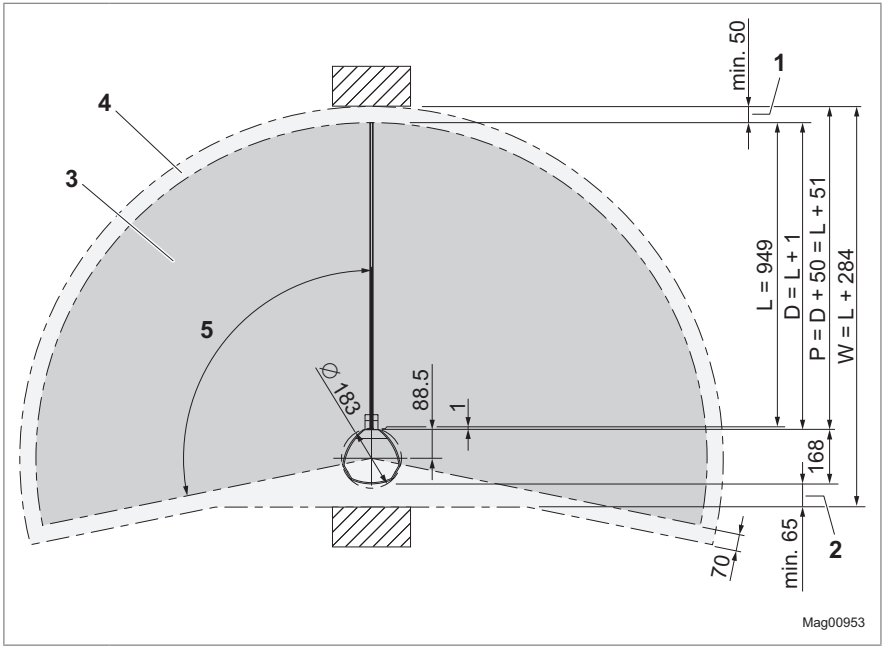

Fig. 4: Swivel range mSwing variant with wing ((dimensions in mm)
L is a standard dimension

1 Minimum distance between outer tube and a fixed object
2 Minimum distance between blocking element and a fixed object
3 Swivel range
4 Area to be kept free
5 Opening angle
D Blocking width
L Blocking element length
P Passage width
W Required mounting width

3.3.2 mSwing with bracket FMSW_MU

There must be no obstacles in the swivel range.

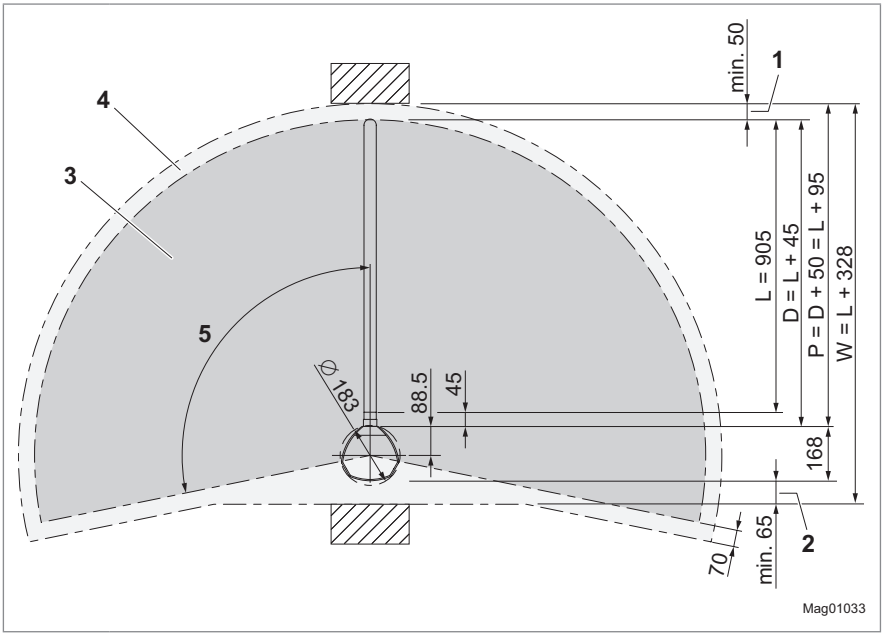

Fig. 5: Swivel range mSwing variant with bracket ((dimensions in mm)
L is a standard dimension

1 Minimum distance between outer tube and a fixed object
2 Minimum distance between blocking element and a fixed object
3 Swivel range
4 Area to be kept free
5 Opening angle
D Blocking width
L Blocking element length
P Passage width
W Required mounting width

3.4 Electrical connection

Designation	Value
Power supply	100 to 240 V AC ± 10 %, 50 to 60 Hz
Current consumption at 240 V AC	1.0 A
Current consumption at 100 V AC	2.1 A
Max. performance	174 W
Duty cycle	100 %

Table 5: Electrical connection

3.5 Operating conditions

Designation	Value
Operating temperature range	–30 to +55 °C
Storage temperature range	–30 to +55 °C
Relative humidity	Max. 95 %, non-condensing
IP rating	IP 54

Table 6: Operating conditions

3.6 Emissions

Designation	Value
Airborne sound pressure level (LpA)	≤ 70 dB (A)

Table 7: Emissions

3.7 Control unit MGC

Designation		Value
Power supply		24 V DC
Control unit		max. 1 A max. 300 mA + current consumption of the different plug-in modules
Power consumption		max. 24 W: Max. 7.2 W + Power consumption of the individual plug-in modules
Control unit safety		1 A T
Output terminal 2	Output voltage	24 V DC
	Max. output current	300 mA
Digital inputs	Number	8
	Input voltage	24 ± 10 % V DC
	Input current	< 10 mA per input
	Max. cable length [1)]	30 m
Digital outputs	Number	4 (open collector)
	Input voltage	24 ± 10 % V DC
	Input current	100 mA
	Max. cable length [1)]	30 m
Relay outputs	Number	3 closers + 3 changeovers , isolated
	Max. switching voltage	30 V AC / DC
	Switching current	10 mA to 1 A
	Max. cable length [1)]	30 m
Display		Graphics display, 128 x 65 Pixel
Number of slots for plug-in modules		5

1) Specification without optional overvoltage module. For line lengths exceeding 30 m, overvoltage modules must be installed in front of the terminal clamps.

Table 8: MGC control unit

4 Design and function

4.1 Design of the mSwing with wing FMSW_MG

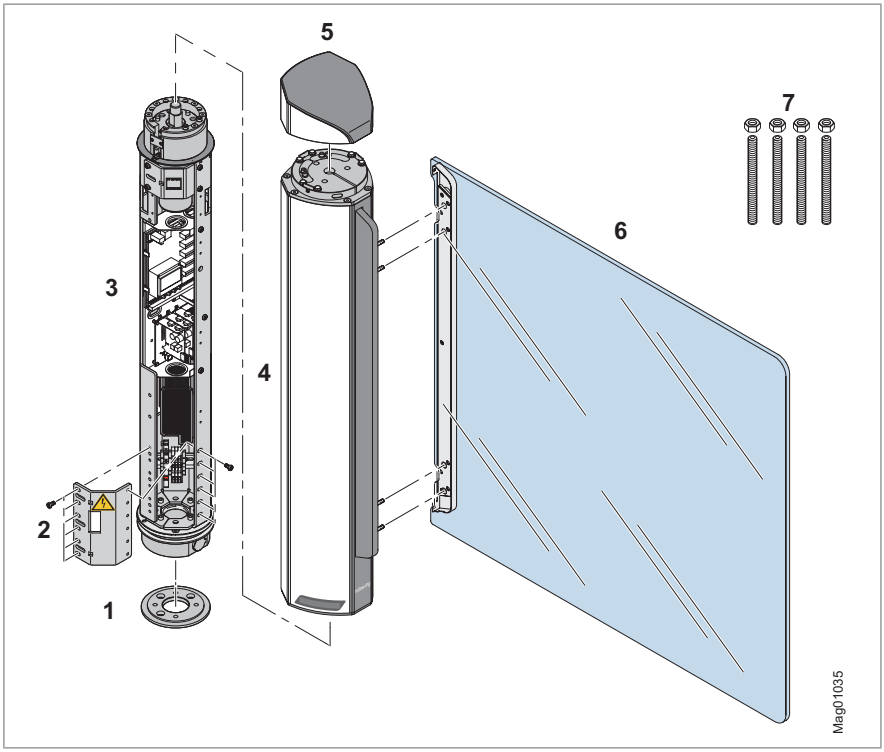

Fig. 6: Design of mSwing variant with wing

1 Floor plate
2 Reinforcing plate
3 Edge profile with control unit MGC and drive
4 Outer tube with tappet flange
5 Cover
6 Blocking element, wing here
7 M8 threaded pins incl. nuts

4.2 Design of the mSwing with bracket FMSW_MU

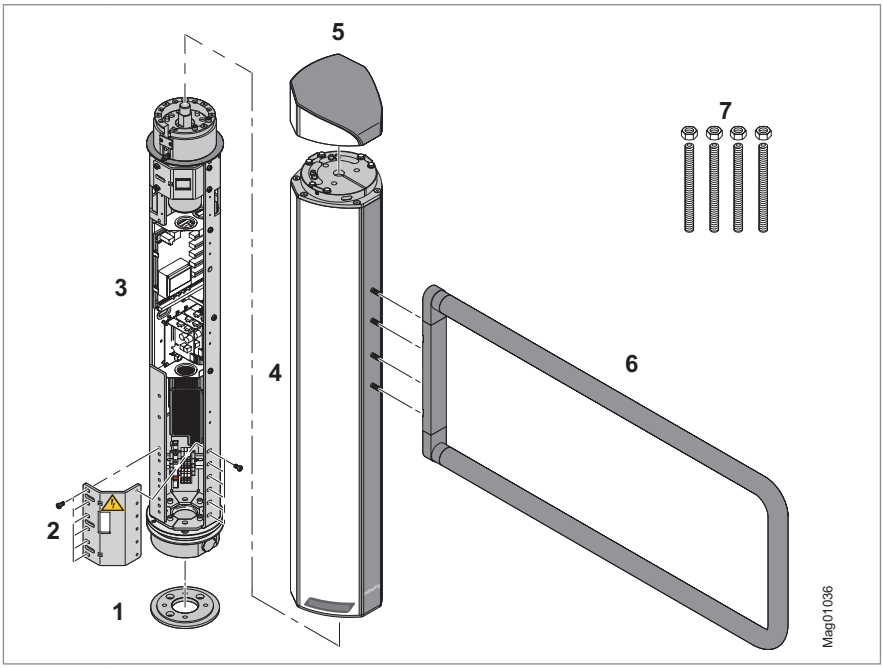

Fig. 7: Design of mSwing variant with bracket

1 Floor plate
2 Reinforcing plate
3 Edge profile with control unit MGC and drive
4 Outer tube with tappet flange
5 Cover
6 Blocking element, bracket here
7 M8 threaded pins incl. nuts

4.3 Function

The Magnetic swing doors mSwing control pedestrians who wish to access or leave areas with restricted access. The swing door is often used in applications with low safety requirements and operated by a supervisor.

The swing door is also suitable as a supplement to other pedestrian gates, where bulky objects must be taken along or persons separated in a wheelchair-accessible manner.

The swing door can be operated in two directions. Ex works, the swing door is configured for the bidirectional operation with an opening angle of 90° each. Opening angles up to 120° are possible. Furthermore, the speed of the blocking element, hold-open time, etc. can be parameterised.

The swing door is opened by external access control systems and via digital inputs. Closing automatically takes place after the set hold-open time or via digital inputs.

The blocking element can be locked in the closed position using an electro-mechanic tooth coupling.

If the blocking element is pushed from one of its positions by application a strong force, the blocking element will swivel automatically back to this position after the force is removed.

The entire drive is nearly maintenance- and wear-free and works without end switch.

If the voltage fails, the swing door can swivel freely in both directions.

4.4 Definition of "left" and "right"

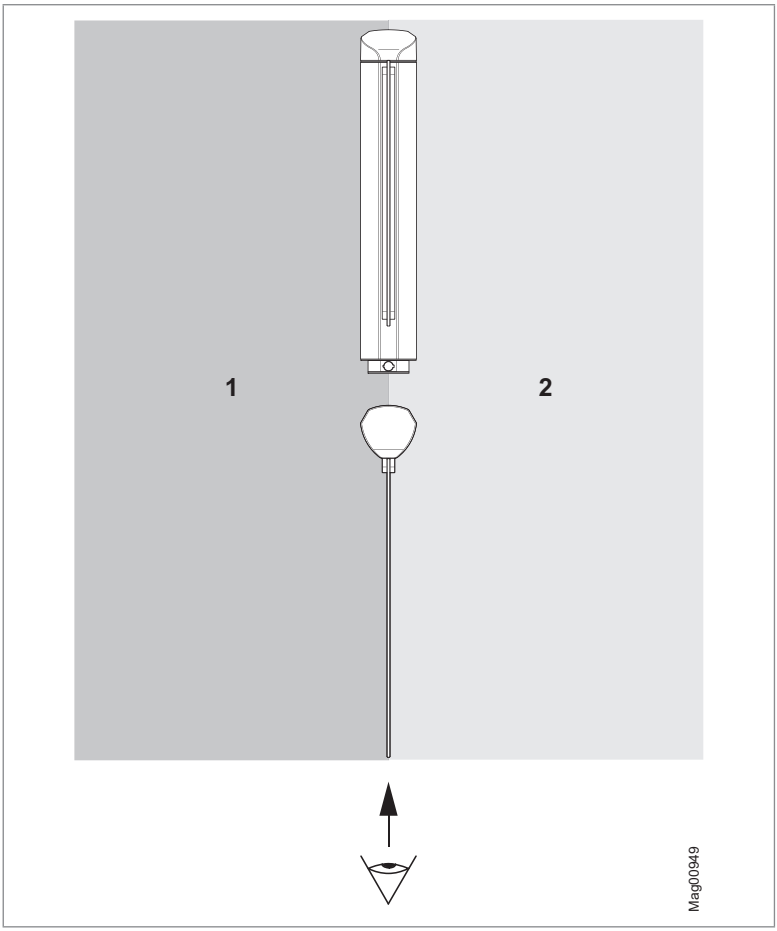

Fig. 8: Definition of "left" and "right"

1 Left (function "open from left" for a passage from the left)

2 Right (function "open from right" for a passage from the right)

5 Receipt of goods, transport and storage

5.1 Goods receiving department

Immediately check the delivery after receipt for completeness and transport damages.

In the event of externally visible transport damage, proceed as follows:

› Do not accept the delivery or only under reserve.
› Note the extent of damage on the transport documents or on the delivery note of the carrier.
› Lodge complaint.

IMPORTANT!
Lodge a complaint for each defect, as soon as it is recognised. Compensation claims can only be submitted within the valid complaint periods.

5.2 Safety during transport

Qualification of personnel

› Transport equipment operator
› Technician
› Magnetic MHTM™ FlowMotion® service expert

↗ Page 12, chapter 2.3.2.

Personal protective equipment

Wear the following personal protective equipment:

› Work clothes
› Protective gloves
› Safety shoes.

⚠ WARNING

Lifting of heavy loads!

The weight of heavy objects can severely injure a person's back or supportive system.

- Preferably transport the transported goods with suitable transport aids.
- Alternatively, the transported goods can be carried by two persons.
- Lift and deposit the transport goods with two persons.

NOTICE

Improper transport!

Improper transport can result in damage to the product.

- Observe the symbols on the packaging.
- Always load, transport and unload packages carefully.
- Observe dimensions.
- Do not remove packaging until immediately before assembly and at the final location of the product.

5.3 Transport

The recipient of the product is responsible for internal transport.

- Transport and put down the load with a suitable forklift or lift truck.
- The forklift forks or lift truck forks must reach completely under the transported goods. Observe the centre of gravity of the load.
- Secure the load with sufficiently sized loops.

5.4 Storage

Store packages or the product under the following conditions:

- Store the delivery in its original packaging. Observe the symbols on the packaging.
- Do not store outdoors.
- Store dry and dust free.
- Do not expose to aggressive media.
- Protect against solar irradiation.
- Avoid mechanical vibrations.
- Storage temperature range: -30 to +55 °C
- Relative humidity: max. 95 %, non-condensing

Check the general condition of all components and packaging regularly, if they are stored for longer periods than 3 months.

6 Unpacking, scope of delivery and identification

6.1 Unpacking

WARNING	
	Lifting of heavy loads! The weight of heavy objects can severely injure a person's back or supportive system. › Preferably transport the transported goods with suitable transport aids. › Alternatively, the transported goods can be carried by two persons. › Lift and deposit the transport goods with two persons.

The individual components are packed according to the expected transport conditions.

Do not destroy the packaging and remove only directly before assembly. The packaging is designed to protect the individual components from transport damage, corrosion, etc.

1. Unpack product at final location.
2. Place the product vertically.
3. Report incomplete and faulty delivery to Magnetic.
4. Check the scope of delivery with the delivery note.
5. Separate material according to type and size and continue to use them after recycling. Observe national and regional laws and guidelines.

6.2 Scope of delivery

The following components are supplied as standard for each swing door mSwing:

- 1 swing door mSwing without blocking element
- 1 blocking element such as wing or bracket
- Reinforcing plate
- Floor plate
- 4 M8 threaded pins
- Screws for the cover plate
- Assembly tool for blocking element cover
- Auxiliary tool for opening the hood
- Documentation: these operating instructions, description "Control unit MGC", wiring diagram, test book and visualisation film (frosted glass film) to be pasted on the wing

For options and attachments, see your order confirmation.

6.3 Identification

6.3.1 Type plate

The type plate is provided on the edge profile below the hood.

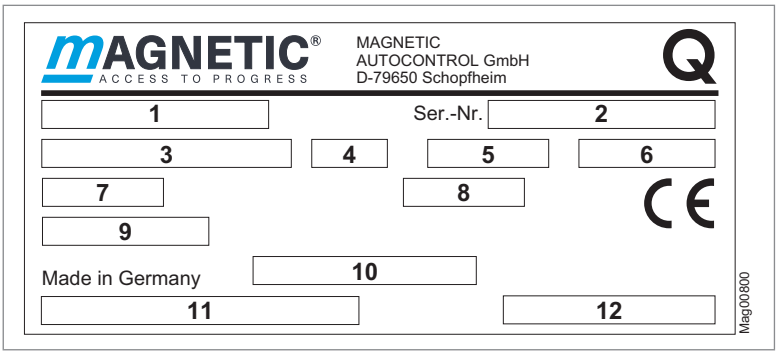

Fig. 9: Type plate

1 Product name
2 Serial number
3 Power supply
4 Frequency
5 Current consumption
6 Power consumption
7 IP rating
8 Duty cycle for operating mode S1 "Continuous operation"
9 Ambient temperature range
10 Date of manufacture, version, printing date of the type plate
11 Barcode of the product name
12 Bar code for serial number

7 Installation and assembly

7.1 Safety during installation and assembly

Qualification of personnel

› Technician
› Magnetic MHTM™ FlowMotion® service expert

↗ Page 12, chapter 2.3.2.

Personal protective equipment

Wear the following personal protective equipment:

› Work clothes
› Protective gloves
› Safety shoes.

⚠ WARNING	
	Improper attachment! Improper attachment can cause the pedestrian gate to tip over, causing bruising and serious injury. › Install the pedestrian gate on the foundation according to the description. › Observe and follow separate notices and instructions provided by the manufacturer of the attachment material. › After assembly, check all bolts and nuts for tightness.

⚠ WARNING	
	Improper assembly on flammable ground! Installing the pedestrian gate on a flammable floor can promote the development of a fire and accelerate the spread of the fire. A fire and the resulting smoke can cause life-threatening injuries. › Only install the pedestrian gate on a non-flammable floor.

7.2 Mounting variants

IMPORTANT!

The attachment sets and the base plate required depending on the mounting variant must be ordered separately.

You may install the swing door mSwing as follows:

Mounting variant	Required material per swing door
Direct mounting Mount the floor plate directly on a foundation. Mount the swing door on the floor plate.	› Attachment set BSS103 for mounting the floor plate
Mount base plate Mount base plate on foundation or unfinished floor. Mount the floor plate on the finished floor using threaded rods. Mount the swing door on the floor plate.	› Base plate FURA103 › Attachment set BSS103 for mounting the base plate › Attachment set BSSFURA103 for mounting the floor plate using threaded rods
Glueing the base plate Glue base plate to foundation or finished floor. Mount the floor plate on the base plate. Mount the swing door on the floor plate.	› Base plate FURA103 › Attachment set BSSKL100 for gluing the base plate › Attachment set BSSFURA103 for mounting the floor plate
Glue floor plate Glue floor plate to foundation or finished floor. Mount the swing door on the floor plate.	› Attachment set BSSKL100 for gluing the floor plate
Plates and interlocking stones Mount base plate on unfinished floor. Mount the floor plate on the plates or interlock stones using threaded rods. Mount the swing door on the floor plate.	› Base plate FURA103 › Attachment set BSS103 for mounting the base plate › Attachment set BSSFURA103 for mounting the floor plate using threaded rods

Table 9: Mounting variants

Attachment set	Consisting of
BSS103	› 3 hexagon head screws M10 x 30 › 3 wedge securing discs › 3 M10 sleeves with inner thread › 3 hexagon head screws M10 x 16 as mounting aid for sleeves with inner thread › 3 washers as mounting aid for sleeves with inner thread
BSSFURA103	› 3 M10 threaded rods › 3 M10 nuts › 3 wedge securing discs › 3 hexagon head screws M10 x 20 › 1 adjustment aid
BSSKL100	› Surface cleaner › Construction adhesive › Remover

Table 10: Description attachment sets

7.3 Required steps

The following work step must be carried out prior to assembly:

› Set up foundation and placing empty conduits.
↗ Page 38, chapter 7.4.

The following work steps must be carried out during assembly:

› Unpack the mSwing. ↗ Page 32, chapter 6.1.
› Set mSwing position. ↗ Page 41, chapter 7.5.
› Prepare mSwing for mounting. ↗ Page 43, chapter 7.6.
› Mount floor plate. ↗ Page 45, chapter 7.7.
› Connect mSwing electrically. ↗ Page 83, chapter 8.
› Assemble mSwing. ↗ Page 67, chapter 7.8.
› Install blocking element. ↗ Page 75, chapter 7.10.
› Adjust the end stops. ↗ Page 71, chapter 7.9.
› Assemble the cover.

7.4 Setting up foundation and placing empty conduits

7.4.1 Requirements foundation

The foundation must meet the following requirements:

- Have sufficient load-carrying capacity
- Concrete C20/25 XD3 XF2 or corresponding industrial floor
- Attachment must be able to grip securely
- Foundation cross section according to foundation and empty conduit plan
- Non-slip surface
- Horizontal and level.

For outdoor assembly, the foundation must meet the following additional requirements:

- Concrete C20/25 XD3 XF2
- Foundation depth: at least 800 mm, frost-proof. Adapt foundation depth to the local conditions.
- Reinforcement mesh according to reinforcement plan

↗ Foundation and empty conduit plan and reinforcement: Page 40, Fig. 11.

7.4.2 Requirements empty conduits

Observe the following points for the empty conduits:

- Place empty conduits according to the foundation plan.
- Conduits have to be planned to a sufficient length.
- Plan empty conduits required for access-control devices and other peripheral devices. The cabling for this is the responsibility of the customer.

Alternatively, you can thread the mains cable and control lines into the swing door via cable screw connections in the floor ring. ↗ Page 39, chapter 7.4.3

IMPORTANT!

To ensure trouble-free operation, install separate empty conduits for the mains cable and control lines.

7.4.3 Thread the lines into the floor ring via cable screw connections

If it is not possible to lay empty conduits in the foundation, you can thread the mains cable and the control lines into the swing door via cable screw connections in the floor ring.

Observe the following points regarding the mounting of the cable screw connections:

› ↗ Page 39, Fig. 10

› Install the cable screw connections opposite the RJ-45 socket. On the RJ-45 socket side, the blocking element is mounted and the passage is located.

› Install mains cable and control lines in separate conduits.

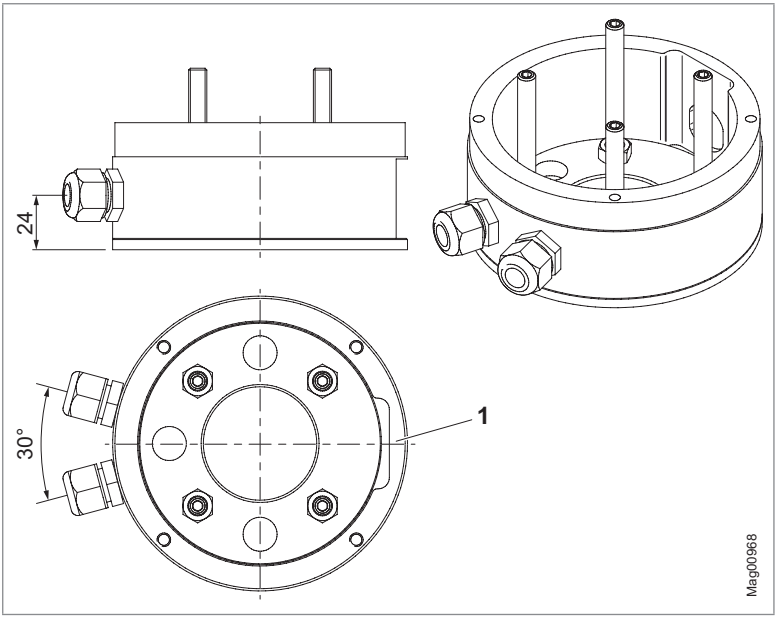

Fig. 10: Mounting cable screw connections

1 RJ-45 socket and future passage

7.4.4 Setting up foundation and placing empty conduits

1. Excavate the foundation hole according to the foundation and empty conduit plan. ↗ Page 40, Fig. 11.
2. If installed outdoors, lay the reinforcement braid.
3. Place empty conduits according to the foundation and empty conduit plan in the foundation hole.
4. Close empty conduit to prevent water from entering.
5. Concrete the foundation.
6. Create smooth coating.
7. Let concrete cure.
8. Apply moisture protection for outdoor installation.

7.4.5 Foundation and empty conduit plan and reinforcement

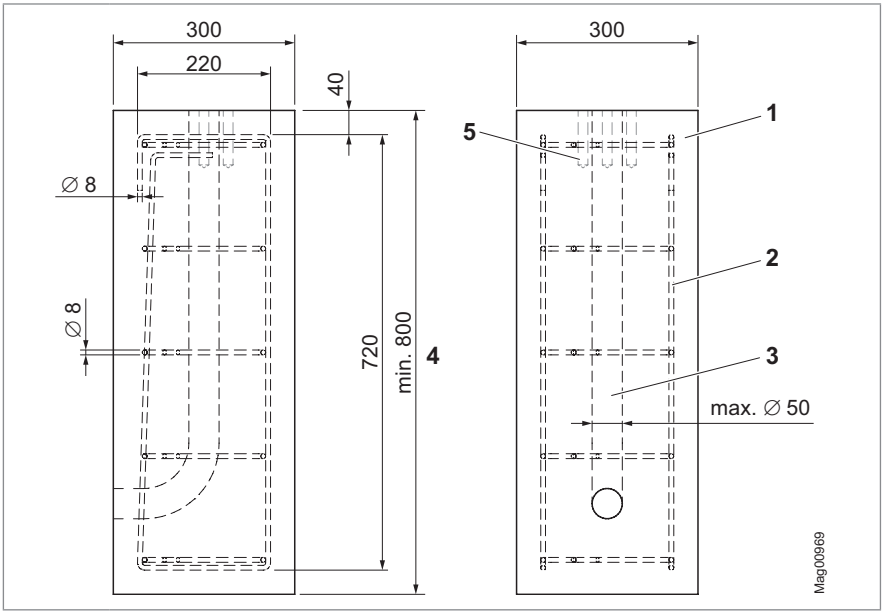

Fig. 11: Foundation and empty conduit plan and reinforcement (dimensions in mm)

1 Foundation
2 Reinforcement
3 Area for conduits
4 Required foundation depth, frost-protected
5 Boreholes, depending on the mounting variant

7.5 Set mSwing position

Observe the following points regarding the position of the swing door mSwing:

› Swivel range of the blocking element ↗ Page 20, chapter 3.2.

› Clearances ↗ Page 20, chapter 3.2.

› The blocking element's orientation in the position "Closed"

Observe on-site conditions such as walls, tile joints and railings. Align the swing door using a laser or scale.

7.5.1 Determining the orientation of the blocking element

Mounting over floor plate

With the following mounting variants, you determine the orientation of the blocking element when mounting the floor plate:

› Direct mounting

› Glue floor plate

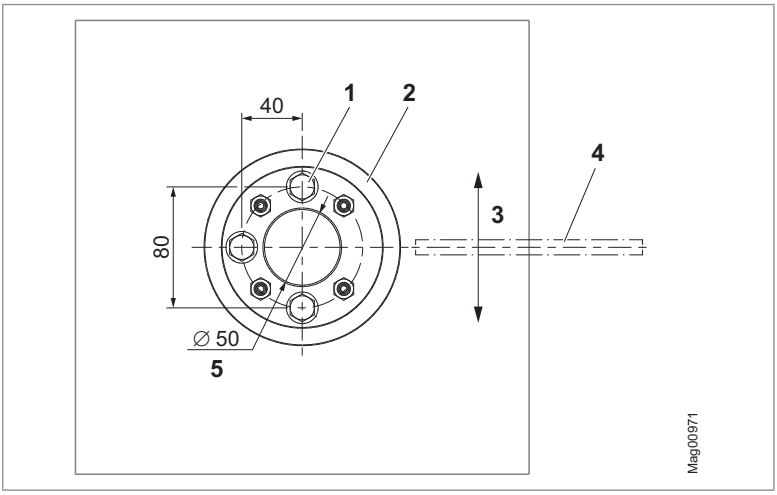

Fig. 12: Determine blocking element orientation over floor plate

1 Foundation anchor (drill holes)

2 Floor plate

3 Passage

4 Blocking element (not yet mounted)

5 Area for conduits

Mounting over base plate

With the following mounting variants, you determine the orientation of the blocking element when mounting the base plate:

- Mount base plate
- Glueing the base plate
- Plates and interlocking stones

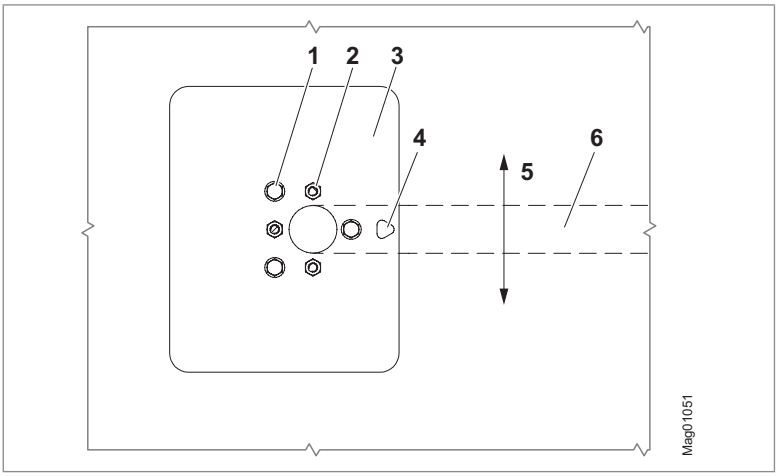

Fig. 13: Determine blocking element orientation over base plate

1 Foundation anchor (drill holes)
2 Threaded rods
3 Base plate FURA103
4 Marking for blocking element orientation
5 Passage
6 Blocking element (not yet mounted)

7.6 Preparing the mSwing for mounting

1. Disassemble the hood. To do so, insert auxiliary tool into the drill hole and simultaneously turn and pull the hood upwards.

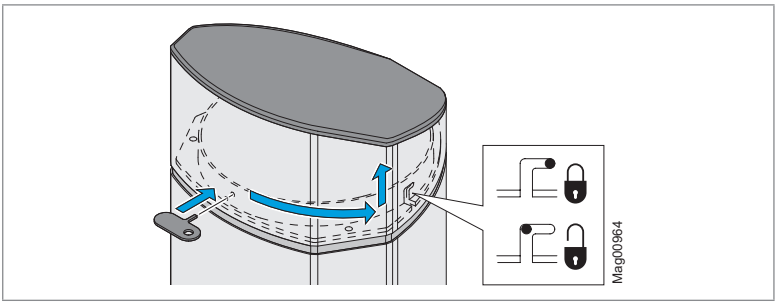

Fig. 14: Disassembling the cover

2. For later mounting, mark the drive shaft with a line in the direction of the gap.

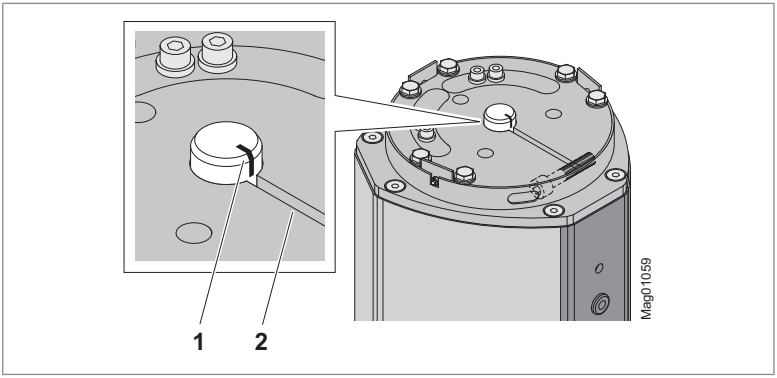

Fig. 15: Removing the outer tube

1 Mark on the drive shaft

2 Gap in tappet flange

3. Remove outer tube. For this, loosen the screw at the tappet flange.

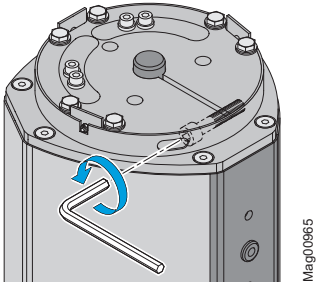

Fig. 16: Removing the outer tube

4. Lift the outer tube off the edge profile.

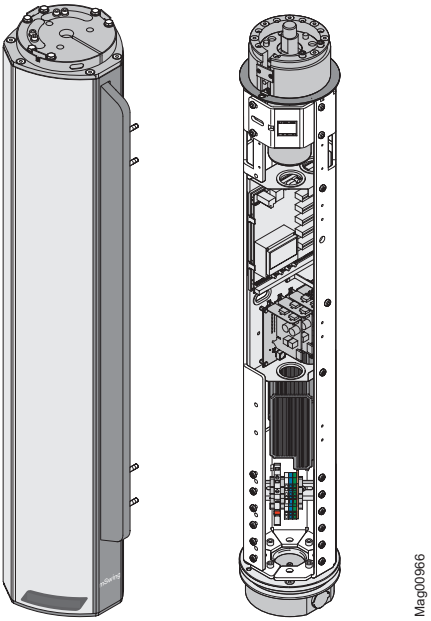

Fig. 17: Outer tube removed

√ The swing door is prepared for floor mounting.

7.7 Mounting the floor plate

7.7.1 Mounting variant "Direct mounting"

With this mounting variant, you mount the floor plate directly on a foundation. Mount the swing door above the floor plate.

Required material:

› Supplied attachment set BSS103

Overview

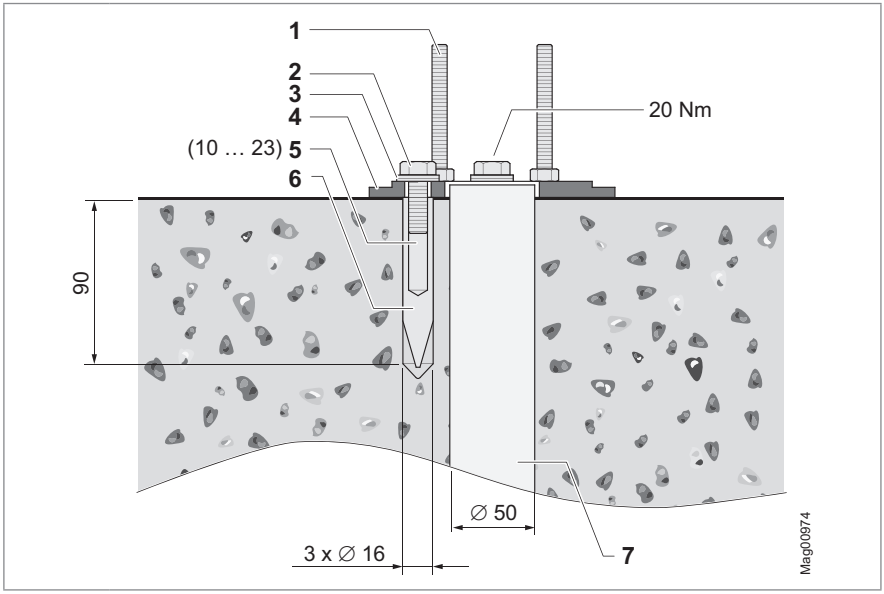

Fig. 18: Overview mounting variant "Direct mounting"

1 M8 threaded pin (4 pcs)
2 Screw M10 x 30 (3 pcs), attachment set BSS103
3 Wedge securing disc (3 pcs), attachment set BSS103
4 Floor plate
5 Thread reach 10 … 23 mm
6 Sleeve with inner thread M10 (3 pcs), attachment set BSS103
7 Area for conduits

Procedure

Prerequisites:

- The foundation was built.
- The empty conduits for the mains cable and the control lines were laid.
- The foundation has cured.
- The swing door is prepared for mounting.

IMPORTANT!
Follow the separate notices and instructions for the composite mortar and foundation anchors.

1. Determine the orientation of the blocking element.

   NOTICE
   Wrong orientation of the blocking element! Note figure. ↗ Page 41, Fig. 12.

2. Sketch the boreholes using the floor plate.

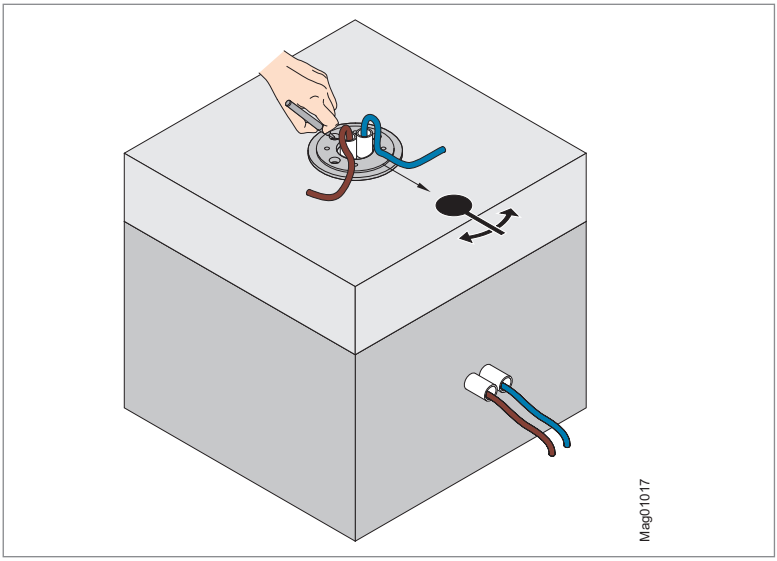

Fig. 19: Sketching the boreholes

3. Bore holes for the sleeves with inner thread. ↗ Page 45, Fig. 18.
4. Clean the boreholes with compressed air.

5. Screw M10 x 16 screws with washers into the sleeves with inner thread.
6. Inject composite mortar into the boreholes.
7. Turn in the sleeves with inner thread to the washers by hand.
8. Wait for the curing time. Follow separate instructions.
9. Remove M10 x 16 screws with washers.
10. Mount floor plate with wedge securing disc and screws. Slightly tighten the screws.

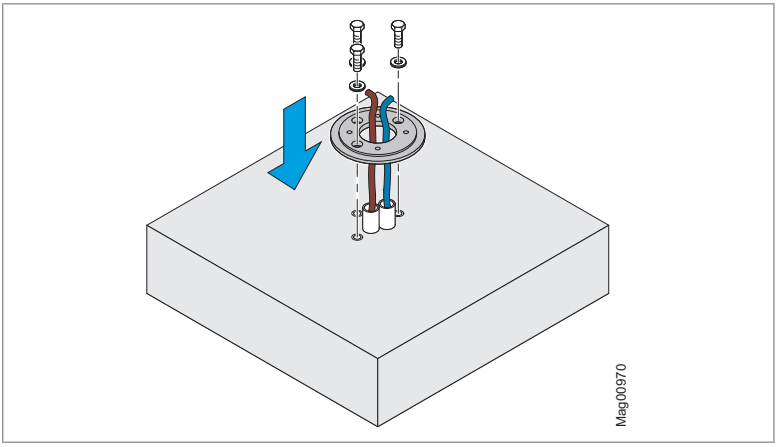

Fig. 20: Mounting the floor plate

11. Screw the threaded pins into the floor plate. Fix the position of the threaded pins with nuts.

    IMPORTANT!
    You can level the floor plate using the threaded pins.

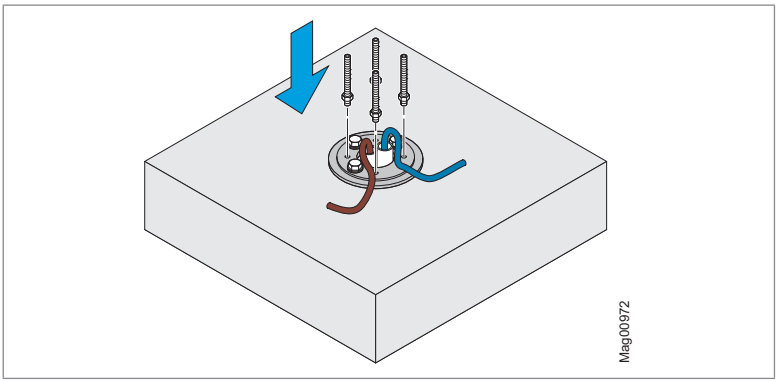

Fig. 21: Mounting the threaded pins

12. Tighten the M10 screws.
    › Tightening torque: 20 Nm
13. Assemble the swivel door mSwing. ↗ Page 67, chapter 7.8.

7.7.2 Mounting variant "Mount base plate"

With this type of installation, first mount the base plate on the foundation or on the unfinished floor. After finishing the finished floor, mount the floor plate. Mount the swing door above the floor plate.

Required material:

- Base plate FURA103
- Attachment set BSS103 for mounting the base plate
- Attachment set BSSFURA103 for mounting the floor plate using threaded rod.

IMPORTANT!

You must order the following accessories separately: Base plate FURA103 and attachment set BSSFURA103.

Overview

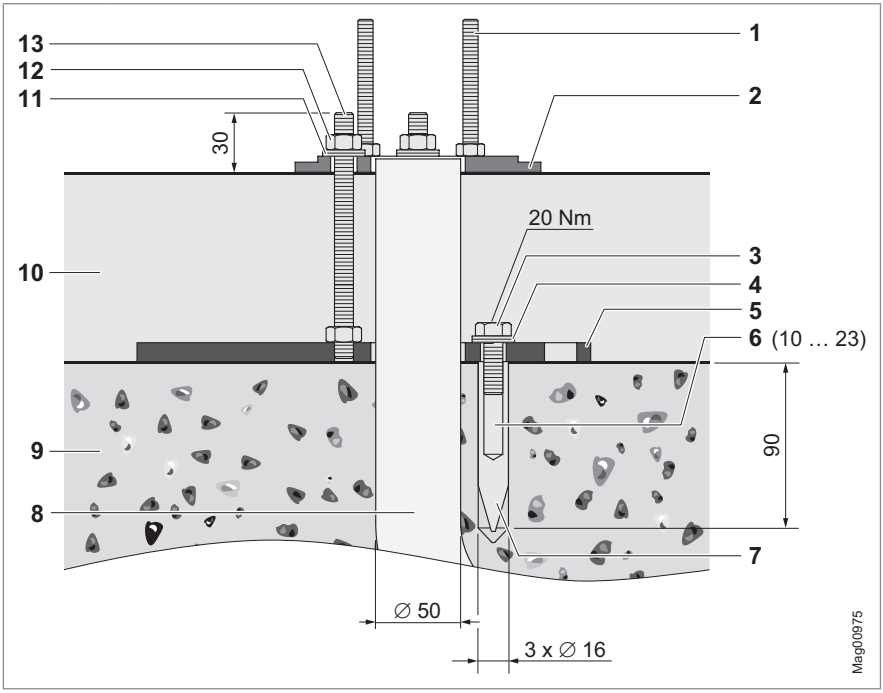

Fig. 22: Overview mounting variant "Mount base plate"

1 M8 threaded pin (4 pcs)
2 Floor plate
3 Screw M10 x 30 (3 pcs), attachment set BSS103
4 Wedge securing disc (3 pcs), attachment set BSS103
5 Base plate FURA103
6 Thread reach 10 … 23 mm
7 Sleeve with inner thread M10 (3 pcs), attachment set BSS103
8 Area for conduits
9 Foundation or unfinished floor
10 Finished floor, for example screed
11 Wedge securing disc
12 M10 nut (3 pcs), attachment set BSSFURA103
13 M10 threaded rod (3 pcs), attachment set BSSFURA103

Install and prepare the base plate before finishing the finished floor

Prerequisites:

› The foundation / unfinished floor was erected.
› The empty conduits were laid.
› The foundation / unfinished floor has hardened.

1. Determine the orientation of the blocking element.

   NOTICE
   Wrong orientation of the blocking element! Note figure. ↗ Page 42, Fig. 13.
2. Sketch the boreholes using the base plate.

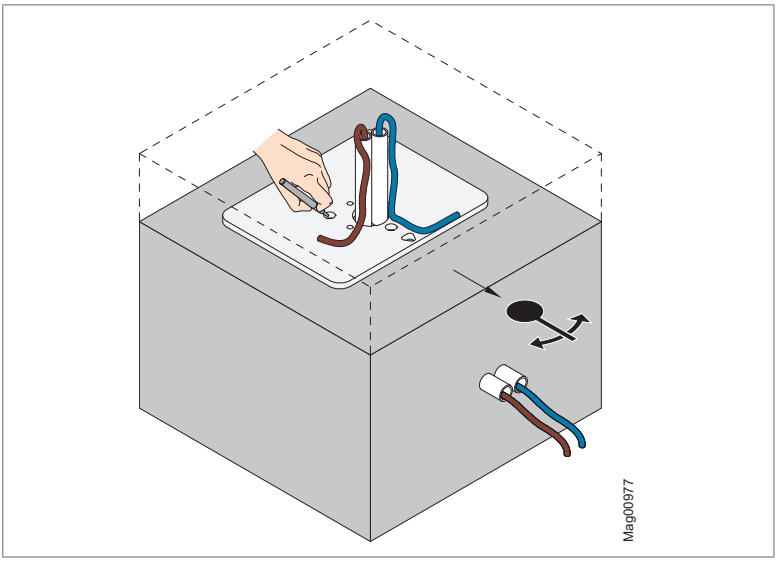

Fig. 23: Sketching the boreholes

3. Bore holes for the sleeves with inner thread. ↗ Page 45, Fig. 18.
4. Clean the boreholes with compressed air.
5. Screw M10 x 16 screws with washers into the sleeves with inner thread.
6. Inject composite mortar into the boreholes.
7. Turn in the sleeves with inner thread to the washers by hand.
8. Wait for the curing time. Follow separate instructions.

9. Remove M10 x 16 screws with washers.
10. Mount the base plate on the foundation or unfinished floor.
    › Tightening torque: 20 Nm

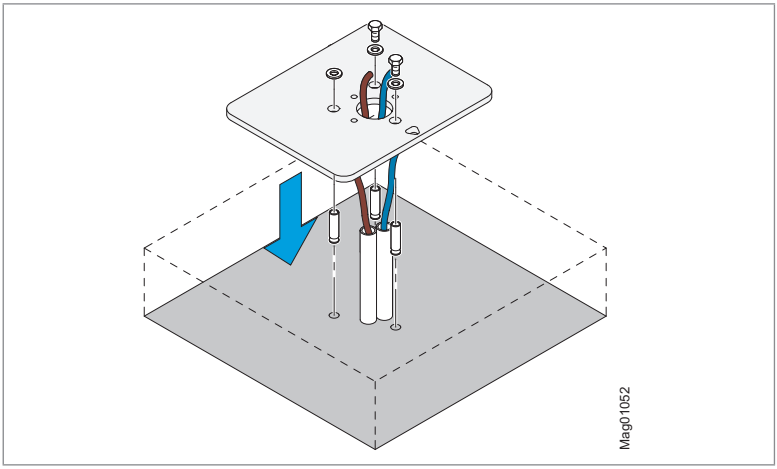

Fig. 24: Mount base plate

11. Screw the threaded rods into the base plate.
12. Fix threaded rods with nuts.
13. Mount the other nuts slightly above the planned finished floor height on the threaded rods.

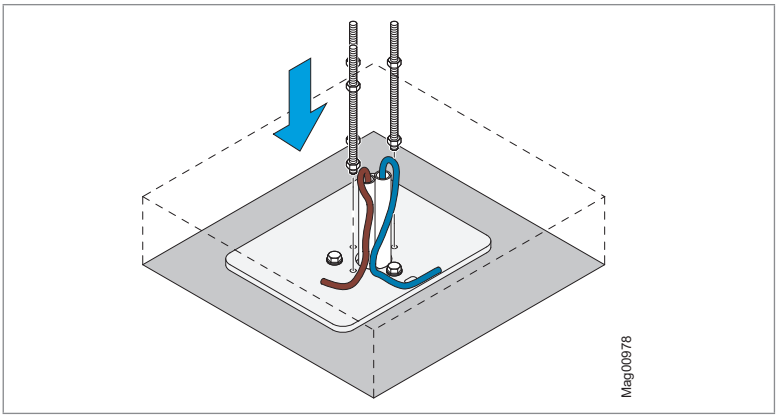

Fig. 25: Mounting the threaded rods

14. Place the adjustment aid on the threaded rods.

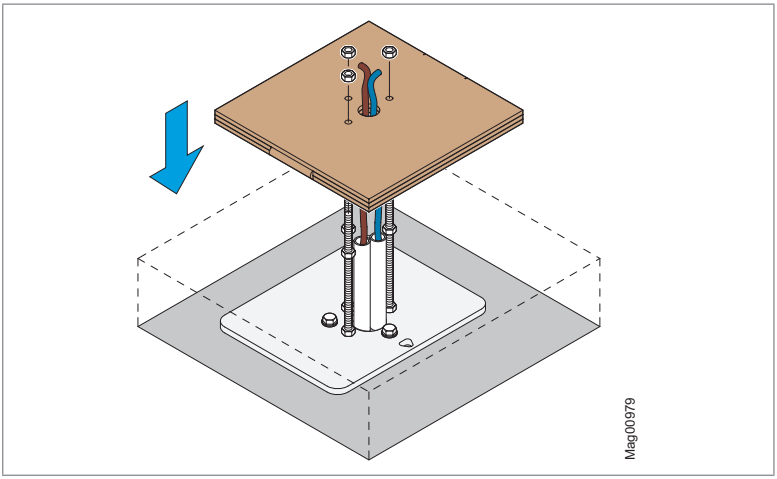

Fig. 26: Placing the adjustment aid

Mounting the swing door after completion of the finished floor

Prerequisites:

› The finished floor is finished.

1. Remove the adjustment aid and nuts from the threaded rods.

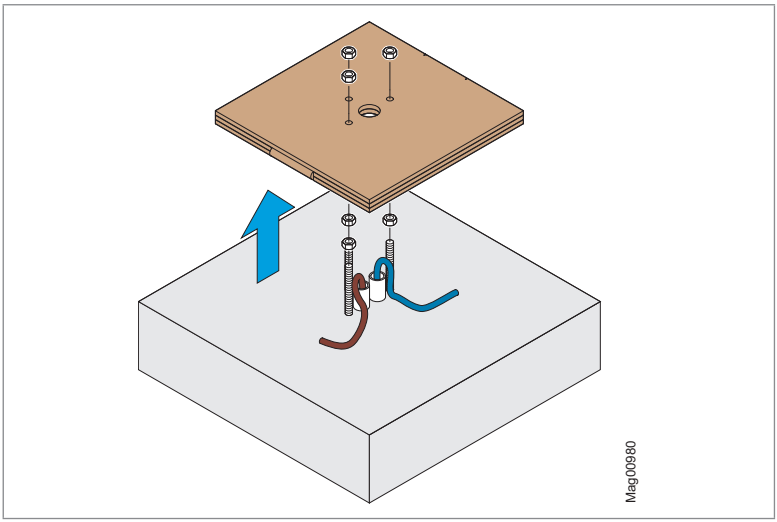

Fig. 27: Remove adjustment aid and nuts

2. Flex off threaded rods 30 mm above the finished floor.

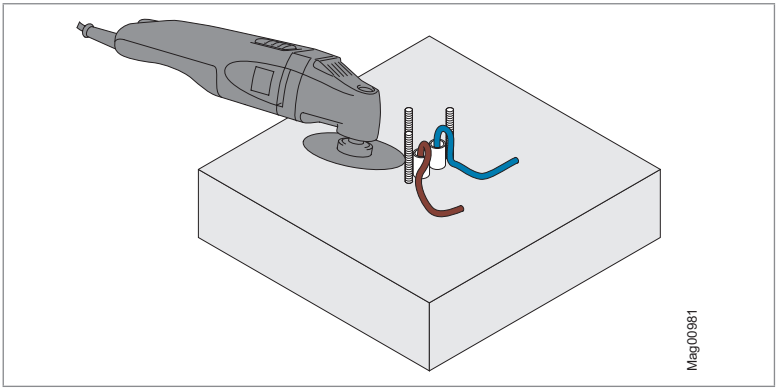

Fig. 28: Flexing off threaded rods

3. Place the floor plate on threaded rods.
4. Mount floor plate with wedge securing disc and nuts. Tighten nuts slightly.

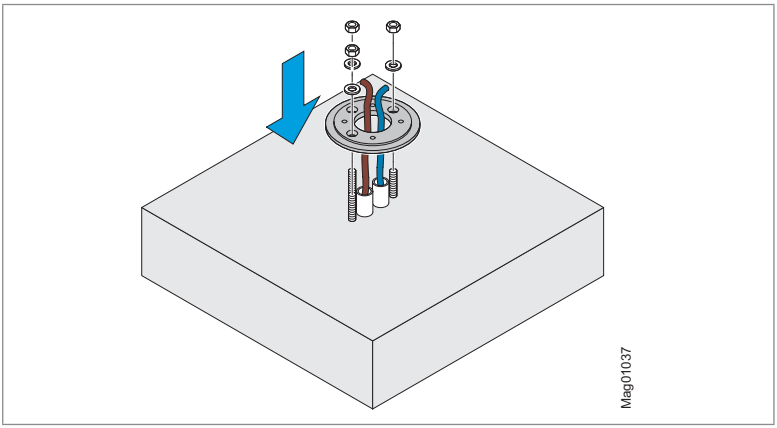

Fig. 29: Mounting the floor plate

5. Screw the threaded pins into the floor plate. Fix the position of the threaded pins with nuts.

   IMPORTANT!
   You can level the floor plate using the threaded pins.

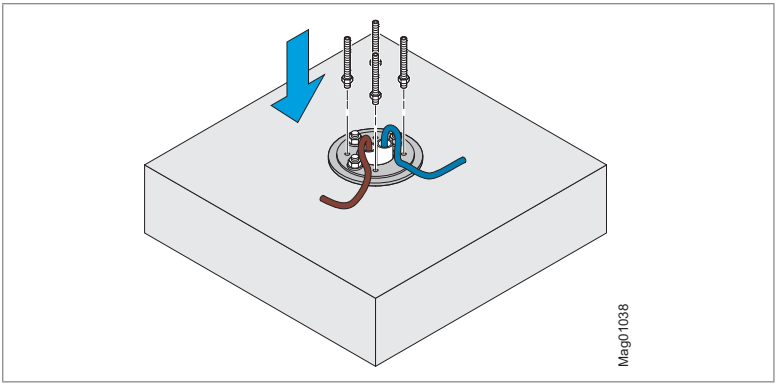

Fig. 30: Mounting the threaded pins

6. Tighten the M10 nuts.
   › Tightening torque: 20 Nm
7. Assemble swivel door mSwing. ↗ Page 67, chapter 7.8.

7.7.3 Mounting variant "Glue base plate"

With this type of installation, you first glue the base plate onto the foundation or the finished floor. Then mount the floor plate on the base plate. Mount the swing door above the floor plate.

Required material:

- Base plate FURA103
- Attachment set BSKL100 for gluing the base plate
- Attachment set BSSFURA103 for mounting the floor plate

IMPORTANT!

You must order the following accessories separately: Base plate FURA103, attachment set BSKL100 and attachment set BSSFURA103.

NOTICE

Unsuitable types of floor!

Some floor types are not suitable for the "gluing" mounting variant.

- Unsuitable floor types are coated floors, PVC coatings, carpets, laminate and parquet.
- Tiles and slabs are only suitable to a limited extent.

Procedure

Prerequisites:

- The foundation / the finished floor was erected.
- The empty conduits were laid.
- The foundation / the finished floor has hardened.
- The foundation / the finished floor must have a tensile strength of at least 2 N/mm^2

IMPORTANT!

Follow the separate instructions and packaging labels for the surface cleaner, construction adhesive and remover.

The floor must be free of paint and varnish.

1. Determine the orientation of the blocking element.

   NOTICE
   Wrong orientation of the blocking element! Note figure.
   ↗ Page 41, Fig. 12.
2. Place and align base plate.
3. Draw the outline of the base plate on the floor. Make sure that the markings are either washable or invisible.

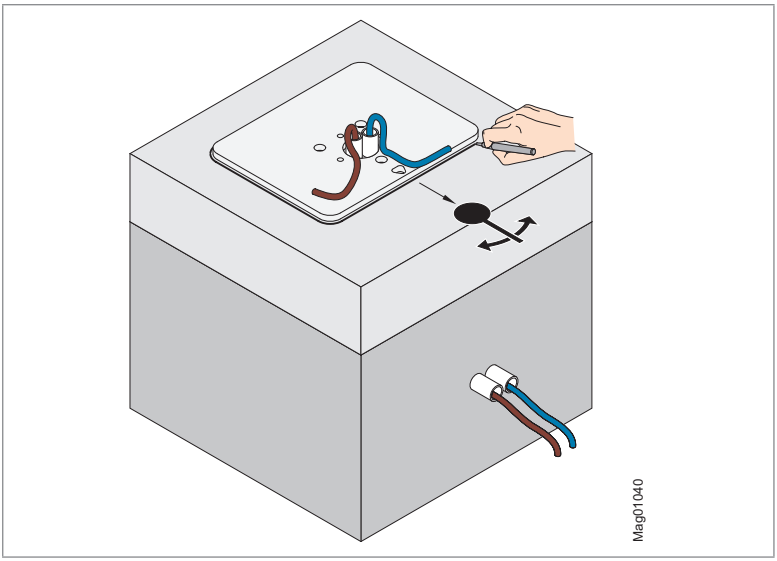

Fig. 31: Mark outline

4. Put the base plate aside. The underside must face upwards.
5. Clean the floor with the "HaftClean" surface cleaner.
6. Clean the underside of the base plate with the surface cleaner "HaftClean Metall".

7. Apply construction adhesive "Klebt + Dichtet Power" to the floor in the form of a beat within the marking. Apply less construction adhesive towards the edge.

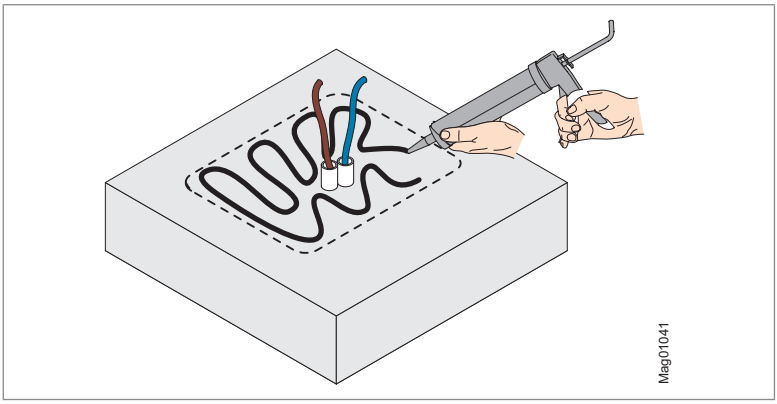

Fig. 32: Apply construction adhesive

8. Immediately place the base plate on the construction adhesive. Observe markings.

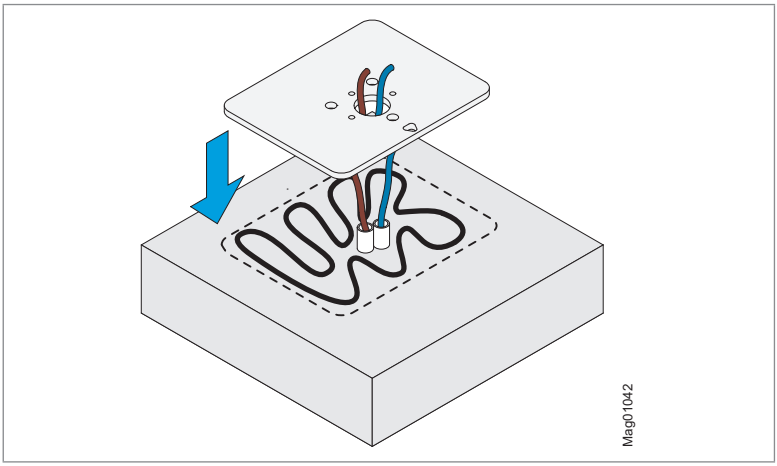

Fig. 33: Place base plate

9. Press the base plate on well immediately. Weigh down the base plate with weights until the construction adhesive has hardened.

10. Remove excess construction adhesive as soon as possible with "Klebt + Dichtet Entferner". If the construction adhesive has already cured, remove excess construction adhesive with a suitable tool. When selecting the tool, consider the material of the base.
11. Wait for the curing time.
12. Mount the floor plate on the base plate.

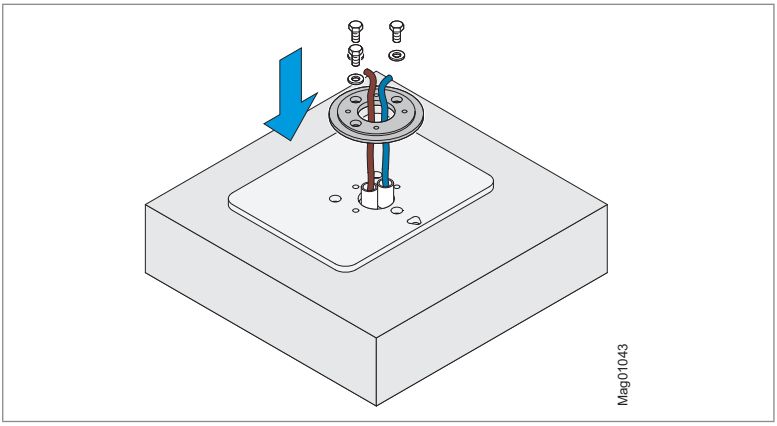

Fig. 34: Mounting the floor plate

13. Mount the threaded pins.

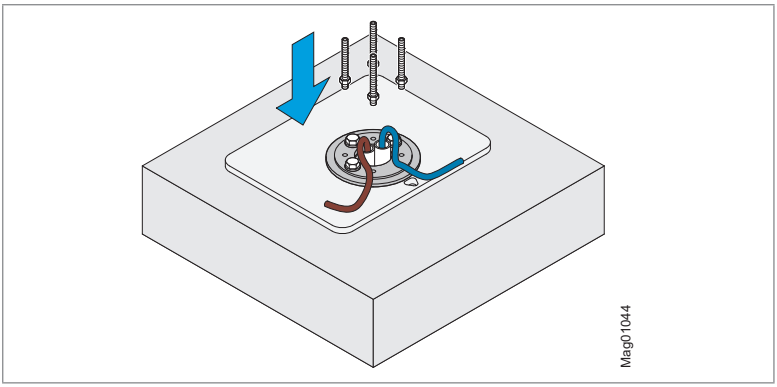

Fig. 35: Mounting the threaded pins

14. Assemble swivel door mSwing. ↗ Page 67, chapter 7.8.

7.7.4 Mounting variant "Glue floor plate"

With this type of installation, you glue the floor plate onto the foundation or the finished floor. Then mount the swing door over the floor plate.

Required material:

› Attachment set BSKL100 for gluing the floor plate

IMPORTANT!

You must order the following accessories separately: Attachment set BSKL100.

⚠ WARNING

Tilting swing door!

If the tensile strength of the floor is not sufficient, the swing door can tip over.

› The floor must have a tensile strength of at least 2 N/mm².

› If in doubt, select the mounting variant "Glue base plate".

NOTICE

Insufficient tensile strength of the floor!

If the tensile strength of the floor is not sufficient, the floor can be damaged during this mounting variant.

› The floor must have a tensile strength of at least 2 N/mm².

› If in doubt, select the mounting variant "Glue base plate".

NOTICE

Unsuitable types of floor!

Some floor types are not suitable for the "gluing" mounting variant.

› Unsuitable floor types are coated floors, PVC coatings, carpets, laminate and parquet.

› Tiles and slabs are only suitable to a limited extent.

Procedure

Prerequisites:

- The foundation / the finished floor was erected.
- The empty conduits were laid.
- The foundation / the finished floor has hardened.
- The foundation / the finished floor must have a tensile strength of at least 2 N/mm²

IMPORTANT!

Follow the separate instructions and packaging labels for the surface cleaner, construction adhesive and remover.

The floor must be free of paint and varnish.

1. Determine the orientation of the blocking element.

   NOTICE
   Wrong orientation of the blocking element! Note figure.
   ↗ Page 41, Fig. 12.
2. Place and align the floor plate.

3. Draw the outline of the floor plate on the floor. Make sure that the markings are either washable or invisible.

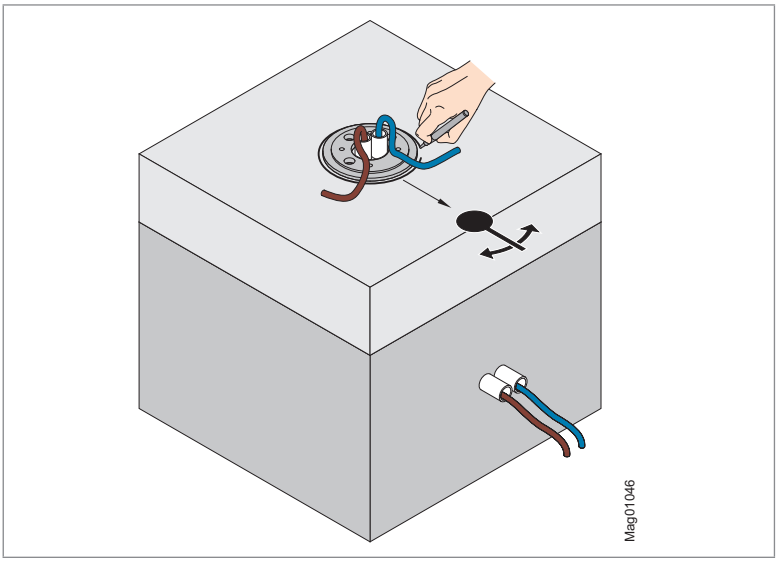

Fig. 36: Mark outline

4. Put the floor plate aside. The underside must face upwards.
5. Clean the floor with the "HaftClean" surface cleaner.
6. Clean the underside of the base plate with the surface cleaner "HaftClean Metall".

7. Apply construction adhesive "Klebt + D Dicht Power" to the floor in the form of a beat within the marking. Apply less construction adhesive towards the edge.

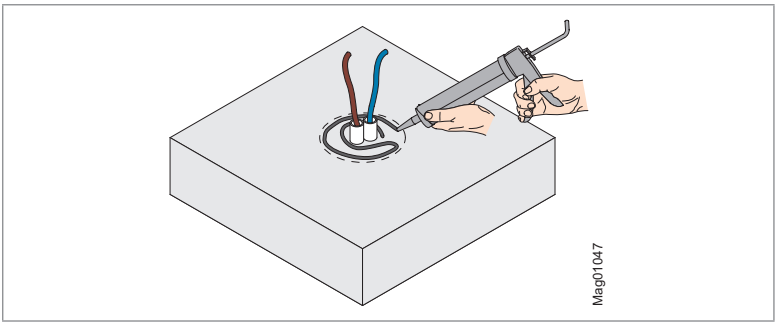

Fig. 37: Apply construction adhesive

8. Immediately place the floor plate on the construction adhesive. Observe markings.

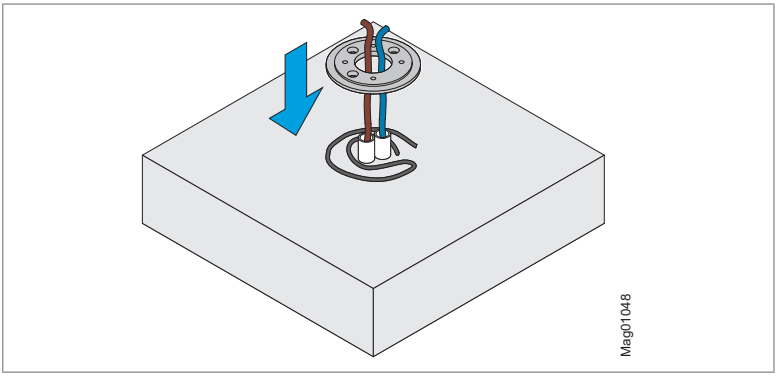

Fig. 38: Place floor plate

9. Press the base plate on well immediately. Weigh down the base plate with weights until the construction adhesive has hardened.
10. Remove excess construction adhesive as soon as possible with "Klebt + Dichtet Entferner". If the construction adhesive has already cured, remove excess construction adhesive with a suitable tool. When selecting the tool, consider the material of the base.
11. Wait for the curing time.

12. Mount the threaded pins.

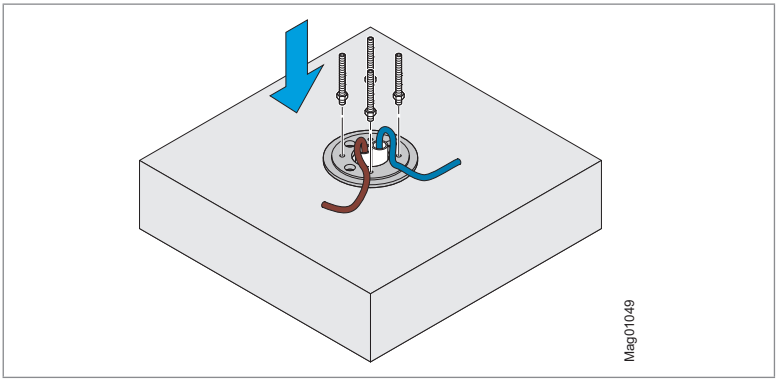

Fig. 39: Mounting the floor plate

13. Assemble swivel door mSwing. ↗ Page 67, chapter 7.8.

7.7.5 Mounting variant "plates or interlocking stones"

With this type of installation, first mount the base plate on the unfinished floor. After the plates or interlocking stones have been laid, mount the floor plate. Mount the swing door above the floor plate.

Required material:

- Base plate FURA103
- Attachment set BSS103 for mounting the base plate
- Attachment set BSSFURA103 for mounting the swing door using threaded rod.

IMPORTANT!

You must order the following accessories separately: Base plate FURA103 and attachment set BSSFURA103.

Overview

↗ Following page.

Procedure

The mounting procedure is identical to that of the "Glue the base plate" variant. ↗ Page 49, chapter 7.7.2.

Overview

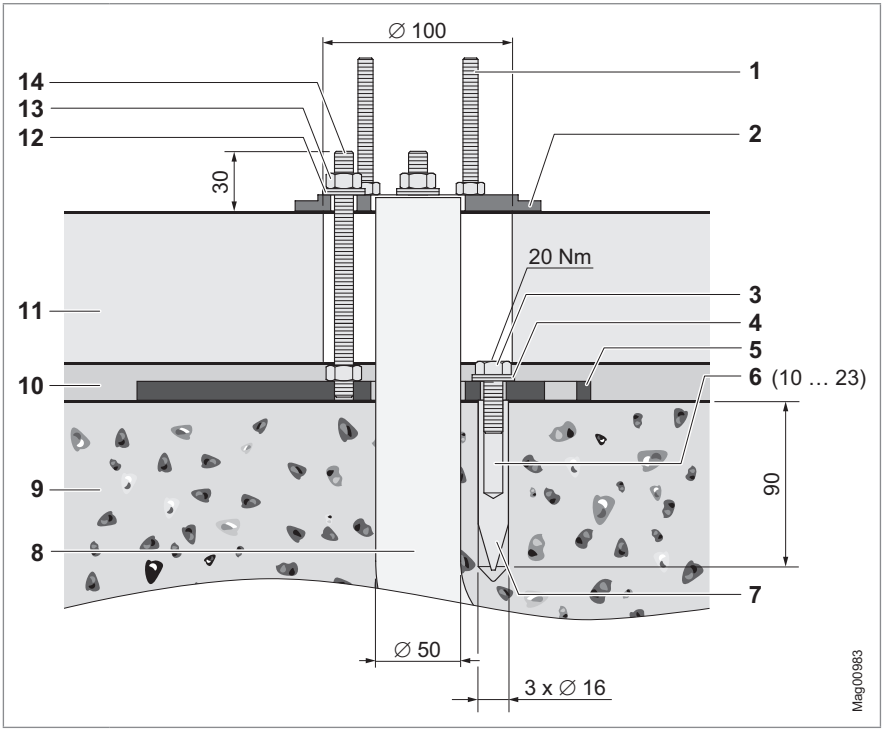

Fig. 40: Overview mounting variant "Plates and interlocking stones"

1 M8 threaded pin (4 pcs)
2 Floor plate
3 Screw M10 x 30 (3 pcs), attachment set BSS103
4 Wedge securing disc (3 pcs), attachment set BSS103
5 Base plate FURA103
6 Thread reach 10 … 23 mm
7 Sleeve with inner thread M10 (3 pcs), attachment set BSS103
8 Area for conduits
9 Unfinished floor
10 Sand or gravel
11 Plates or interlocking stones
12 Wedge securing disc
13 M10 nut (3 pcs), attachment set BSSFURA103
14 M10 threaded rod (3 pcs), attachment set BSSFURA103

7.8 Assembly of the mSwing

Prerequisites

› The floor plate is mounted on the floor.

› The threaded pins are mounted.

1. Place the edge profile with floor ring on the threaded pins. Place the edge profile with the floor ring so that the RJ-45 socket points in the same direction as the blocking element.
2. Fasten the edge profile with washers and nuts.

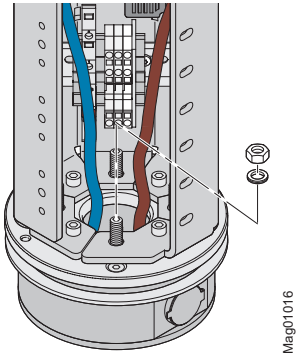

Fig. 41: Mount edge profile

3. Arrange electrical connections. ↗ Page 83, chapter 8.
4. Switch on the on and off switch. ↗ Page 88, chapter 9.3.
5. Mount the reinforcing plates.

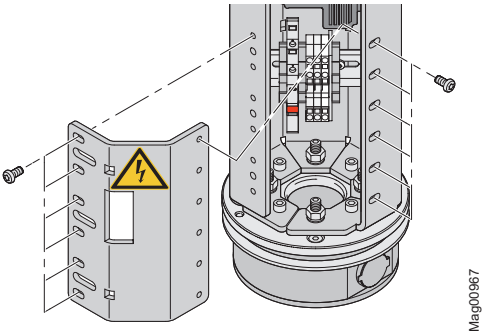

Fig. 42: Mount reinforcing plates

6. Check that the clutch disc is correctly positioned in the edge profile. A journal of the clutch disc and the key surfaces of the drive shaft must be aligned with the blocking element. The blocking element must be in the "Closed" position.

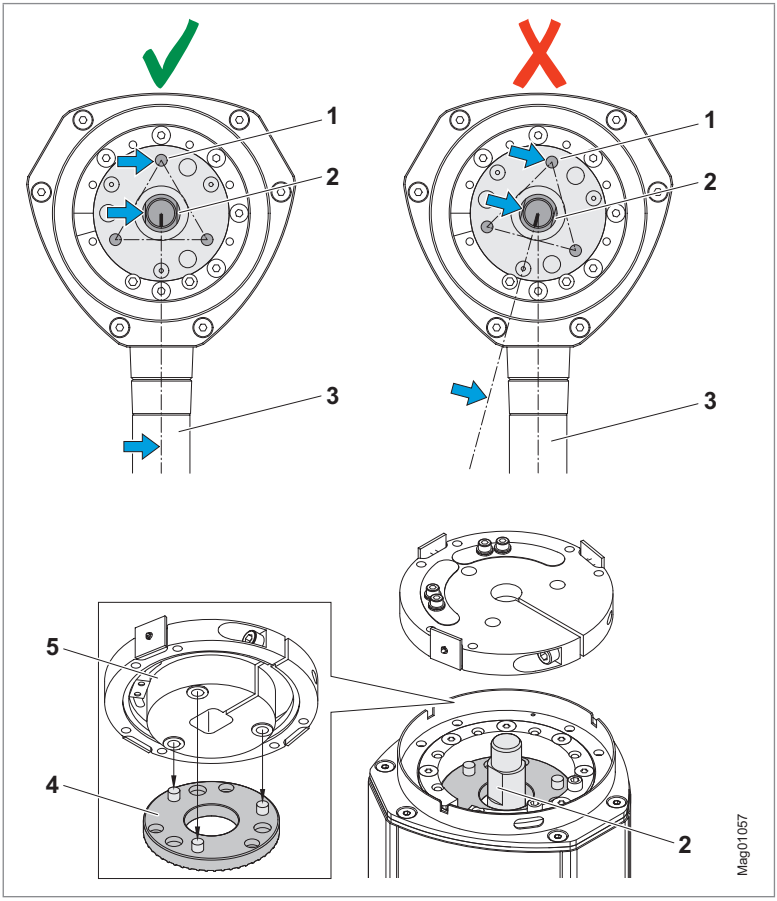

Fig. 43: Correct and incorrect positioning of the clutch disc

1 Clutch disc journal
2 Key surface of the drive shaft
3 Blocking element
4 Clutch discs
5 Tappet flange of the outer tube (exploded view)

7. Place outer tube on the edge profile.
8. Check that the drive shaft protrudes 8 mm from the tappet flange.

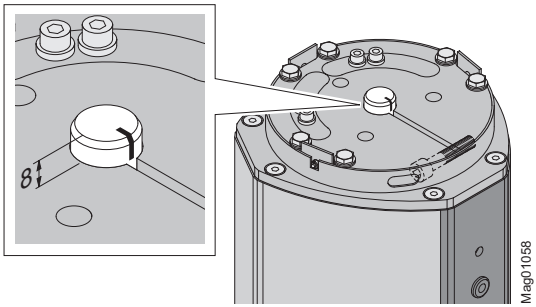

Fig. 44: Check drive shaft dimension

9. Install outer tube. For this, tighten the barrier at the tappet flange.

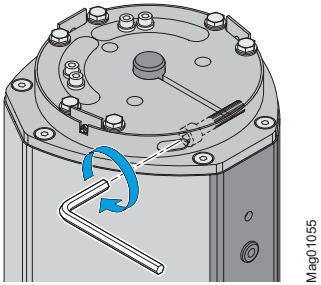

Fig. 45: Install outer tube

10. Install blocking element. ↗ Page 75, chapter 7.10.
11. Adjust the end stops. ↗ Page 71, chapter 7.9.
12. Assemble the cover.

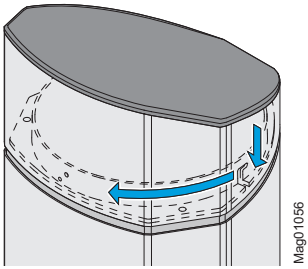

Fig. 46: Mounting the cover

7.9 Adjusting the end stops

7.9.1 Explanations of mechanical end stops

The mechanical end stops "Left" and "Right" are set by 2 fixed end stops and by 2 following end stops. A fixed end stop consists of a screw. A following end stop consists of a square and 2 screws.

The fixed end stops are used for gross adjustment. The following end stops are used for precise adjustment.

After the swing door is switched on, the left and right end stops are approached to determine the angle of rotation. During operation the left and right target position are approx. 3° away from the respective end stop.
↗ Page 72, chapter 7.9.3.

7.9.2 Adjusting the end stops

1. Adjust mechanical fixed end stops "Left" and "Right" using the screws.
   ↗ Page 73, chapter 7.9.4.
2. Install outer tube. ↗ Page 74, chapter 7.9.5.
3. Install blocking element. ↗ Page 75, chapter 7.10.
4. Turn the blocking element in the first desired target position manually.
5. Further turn the blocking element by hand for 3°.
6. Check that the blocking element is at least 50 mm away from solid walls and objects in the end position.
7. Move the corresponding following end stop in the crescent until the following end stop abuts against the inner stop screw.
8. Check that the cover plate completely covers the crescent. Turn the cover plate if necessary.
9. Tighten the screws for the following end stop with 5 Nm.
10. Follow steps 4 to 9 for the second target position.
11. Perform reset
12. Set target positions on the MGC control unit or via mSwing Connect.

During the setting, observe the following points:

› The mechanical end stops must be set at least 3° behind the respective target position.

› If you change the setting of the mechanical end stops, you must check the target positions and reset them if necessary.

IMPORTANT!
For setting the target positions and to reset, see separate document "Description of MGC control unit for mSwing (Doc.ID: 5817,0031)".

7.9.3 Factory setting and example for another setting

Factory setting

The factory setting for the target position "Left" is -90° and for the target position "Right" +90°.

- Target position "Left" on the MGC control unit: -90°
- Mechanical following end stop "Left" (precise adjustment): -93°
- Mechanical fixed end stop "Left" (gross adjustment):
  Position **c** (-55°C ... -100°)
- Target position "Right" on the MGC control unit: +90°
- Mechanical following end stop "Right" (precise adjustment): +93°
- Mechanical fixed end stop "Right" (gross adjustment):
  Position **d** (+55°C ... +100°)

Example for another setting

For the target position "Left", set -105°, and for the target position "Right", set +105°.

- Target position "Left": -105°
- Mechanical following end stop "Left" (precise adjustment): -108°
- Mechanical fixed end stop "Left" (gross adjustment):
  Position **d** (-100 °C ... -120°)
- Target position "Right": +105°
- Mechanical following end stop "Right" (precise adjustment): +108°
- Mechanical fixed end stop "Right" (gross adjustment):
  Position **c** (+100 °C ... +120°)

7.9.4 Adjusting the fixed end stops (gross adjustment)

The fixed end stops are used for gross adjustment. Tighten screws to 17 Nm.

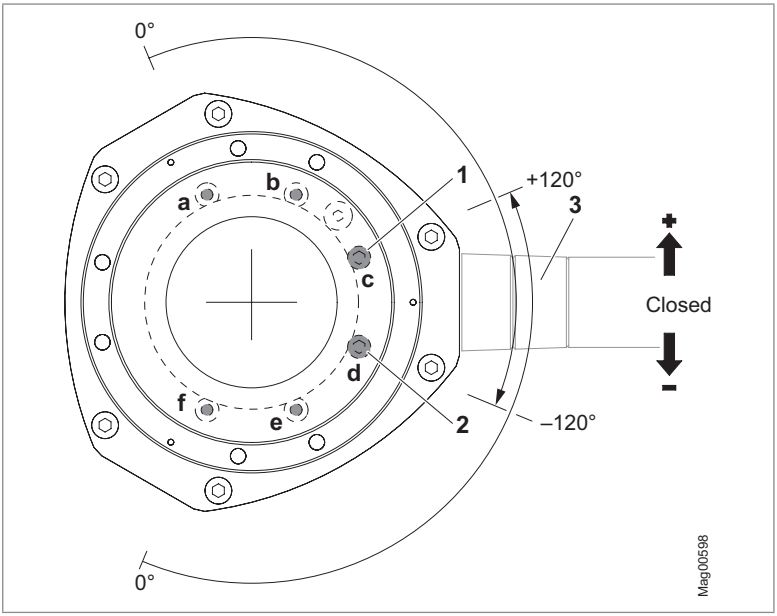

Fig. 47: Gross adjustment

1 Fixed end stop for rotating direction to the left (Open from right)

2 Fixed end stop for rotating direction to the right (Open from left)

3 Blocking element in position "Closed" (locking element not yet mounted)

By positioning the two screws for the fixed end stops, you set the rotation angle ranges for both rotating directions.

Marking in figure	Fixed end stop for rotating direction to the left	Fixed end stop for rotating direction to the right
a	0° … -10°	–
b	-10° … -55°	–
c	-55 … -100° (Factory setting)	+100° … +120°
d	-100° … -120°	+55 … +100° (Factory setting)
e	–	+10° … +55°
f	–	0° … +10°

Table 11: Angle of rotation ranges depending on the set position

7.9.5 Adjusting the following end stops (precise adjustment)

The following end stops are used for precise adjustment.

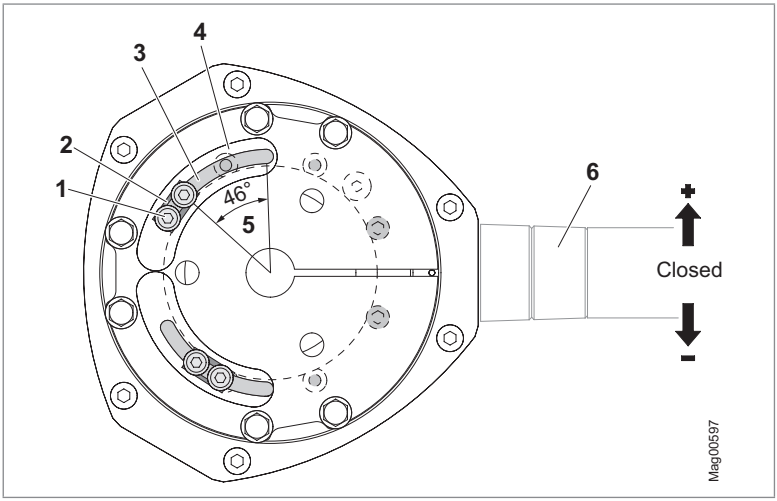

Fig. 48: Precise adjustment

1 Screw of the following end stop (2 pcs)
2 Square of the following end stop, positioned below the tappet flange
3 Crescent in tappet flange
4 Cover plate for crescent
5 Maximum setting angle for precise adjustment
6 Blocking element in position "Closed" (locking element not yet mounted)

7.10 Mounting and dismounting the blocking element

7.10.1 Mounting the blocking element "Wings"

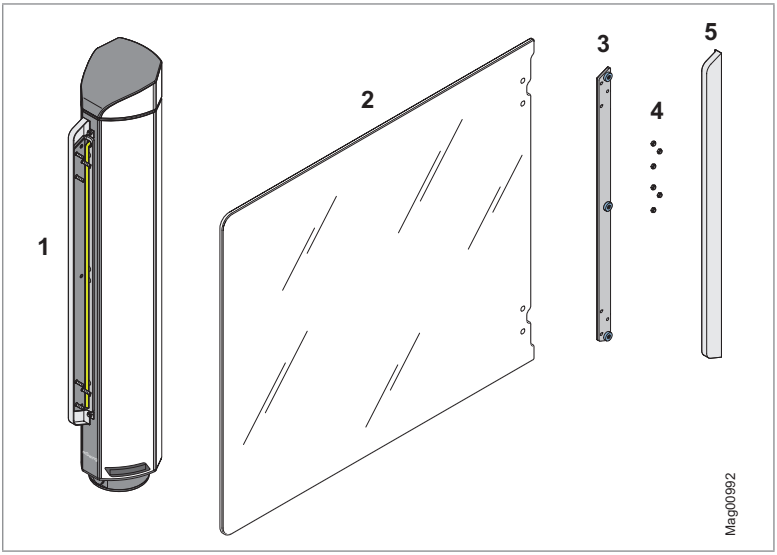

Fig. 49: Components for "Wing" variant

1 mSwing, outer tube mounted
2 Wing
3 Retaining plate
4 Nut (6 pcs)
5 Cover

1. Slide the wings onto the screws.
2. Mount retaining plate with discs and nuts.

3. Assemble cover. The cover is held by 3 magnets.

   ⚠ CAUTION
   Danger of crushing!

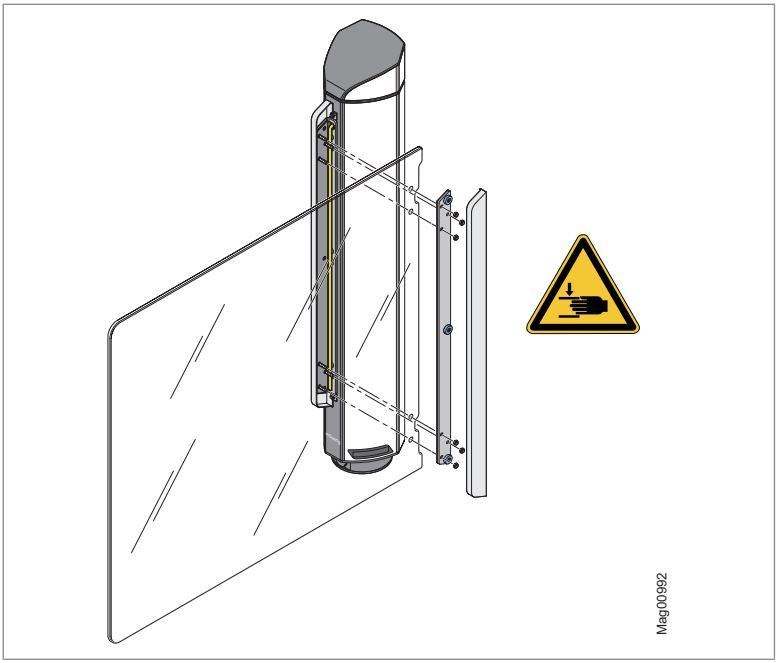

Fig. 50: Installing wings

√ The wing is installed.

7.10.2 Dismounting the blocking element "Wings"

There is a protrusion at the bottom of the cover.

1. Use the supplied assembly tool to lever off the cover at this protrusion.
2. Remove the cover.

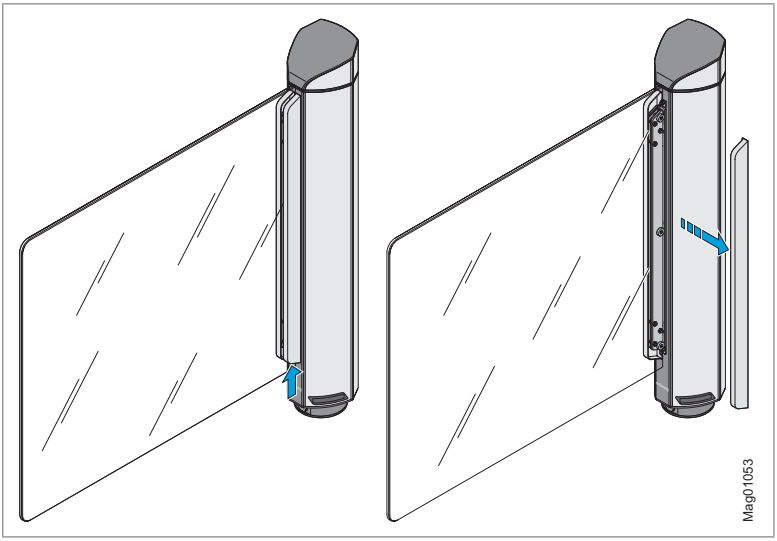

Fig. 51: Dismount wings

3. Mount wings in the reverse order as for mounting.

7.10.3 Mounting the blocking element "Bracket"

The following components are supplied for variants with brackets.

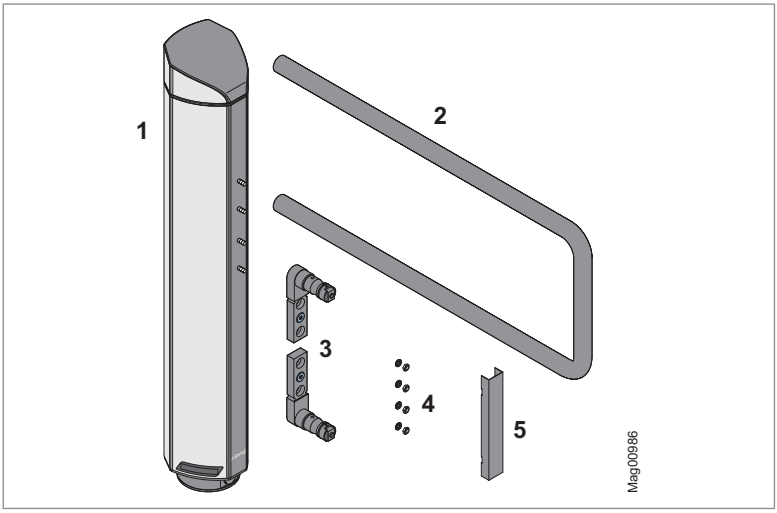

Fig. 52: Components for "Bracket" variant

1 mSwing, outer tube mounted
2 Bracket
3 Flange (2 pcs)
4 Wedge securing disc and nut (4 pcs each)
5 Cover

1. Insert the flanges into the bracket tube.

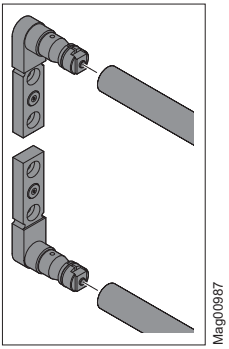

Fig. 53: Installing brackets

2. Align the flanges flush with each other.
3. Tighten the screws. Make sure that the flanges do not twist. Fix the flanges with screw clamps if necessary.
   › Tightening torque: 32 Nm

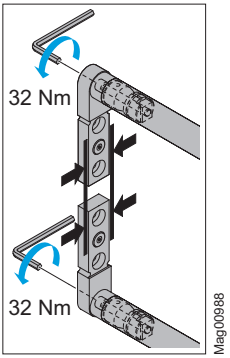

Fig. 54: Installing brackets

4. Slide the flanges with brackets onto the screws on the outer tube.
5. Fasten flanges with brackets with wedge securing discs and nuts.
   › Tightening torque: 16 Nm

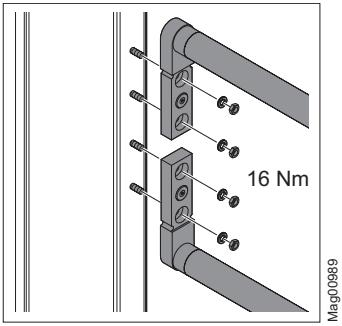

Fig. 55: Installing brackets

6. Place the cover. The cover is held by 2 magnets.
   ⚠ CAUTION
   Danger of crushing!

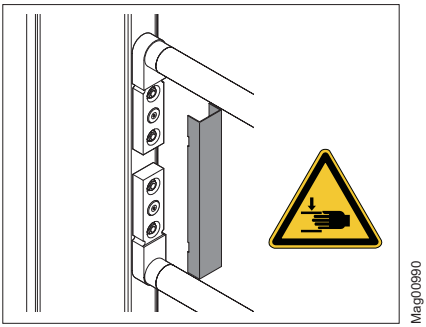

Fig. 56: Installing brackets

√ The bracket is installed.

7.10.4 Dismounting the blocking element "Bracket"

There is a protrusion at the side of the cover.

1. Use the supplied assembly tool to lever off the cover at this protrusion.
2. Remove the cover.

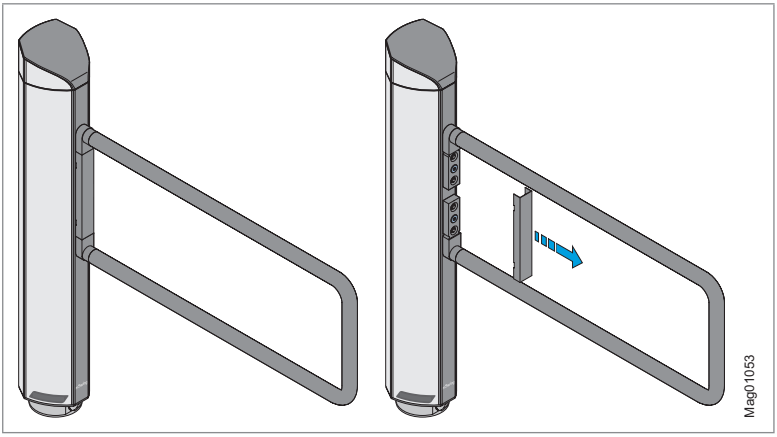

Fig. 57: Remove brackets

3. Mount brackets in the reverse order as for mounting.

7.11 Opening and closing the housing

The housing must be opened for the following activities:

› Switch the pedestrian gate on and off.
› Perform electrical connection and wiring.

Opening the housing

↗ Page 43, chapter 7.6.

Closing the housing

↗ Page 67, chapter 7.8.

7.12 Checking the assembly

After assembly, check the following points:

› Are all screws and nuts tightened?
› Have all pedestrian gate covers been properly assembled?

8 Electrical connection

8.1 Safety during electrical connection

Qualification of personnel

› Technician
› Magnetic MHTM™ FlowMotion® service expert

↗ Page 12, chapter 2.3.2.

Personal protective equipment

Wear the following personal protective equipment:

› Work clothes
› Protective gloves
› Safety shoes.

⚠ DANGER	
	Electric voltage! Touching live parts can be lethal. Damaged insulation or damaged parts may be fatal. › Only qualified electricians or electrical safety experts may work on the electrical system. › Switch off power supply and secure against re-activation before performing any work. Test for absence of voltage. › Keep moisture and dust away from live parts. Penetrating moisture or dust can lead to a short circuit. › If the electrical connection is established at precipitation, e.g. rain or snow, penetration of moisture must be prevented by suitable measures, such as a protective cover. › Install protective devices that are prescribed by national regulations, such as e.g. residual current circuit breakers. These protective devices must be provided by the customer. › Observe the information on the type plate. › Close all covers after work has been carried out.

DANGER	
	Mortal danger from lightning and electrical voltage! During or after a lightning strike into the system, there is danger to life if the components are touched or during a stay in the immediate vicinity of the system. › When installing outdoors, do not install and mount the pedestrian gate during thunderstorms. › Protect yourself in buildings or vehicles.

NOTICE	
	Electromagnetic interference! The pedestrian gate is approved for industrial, residential, commercial and business use. Operation in other electro-magnetic environmental conditions may cause interference or malfunctions. › Place control lines and mains cables into separate conduits. › Customer access-control devices, signal transmitters and receivers must be EMC-tested and comply with the prescribed EMC limits. In this case, a conformity assessment must be carried out by the customer.

8.2 Installing electrical protective devices

Protective devices that are prescribed by national regulations must be installed on site. This safety equipment is to be provided by the customer.

As a rule, the following protective devices must be installed:

› Residual current device (RCD)

› Circuit-breaker

› Lockable 2-pole main switch acc. to EN 60947-3.

8.3 Connecting the mains cable

IMPORTANT!
The wire cross-section of the mains cable must be between 1.5 and 4 mm². Observe national provisions on line length and associated line cross-section.

Prerequisites

› The housing is open. ↗ Page 82, chapter 7.11

1. Disconnect the system from the power supply. Ensure that the system is powered down. Secure against reactivation.

   ⚠ DANGER
   Mortal danger by electric voltage!

2. Strip mains cable and strands according to the following figure.

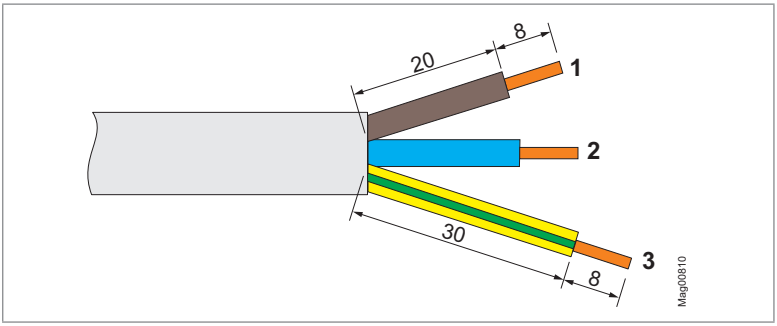

Fig. 58: Stripping (dimensions in mm)

1 Phase
2 Zero conductor
3 Protective earth conductor

3. Carefully lead the mains cable through the housing to the connection compartment and fasten it with the brackets.
4. Connect the mains cable to the terminals X1: Connect L / N / PE. ↗ Wiring diagram, separate document.
5. Attach mains cable to the tabs with 2 cable ties.

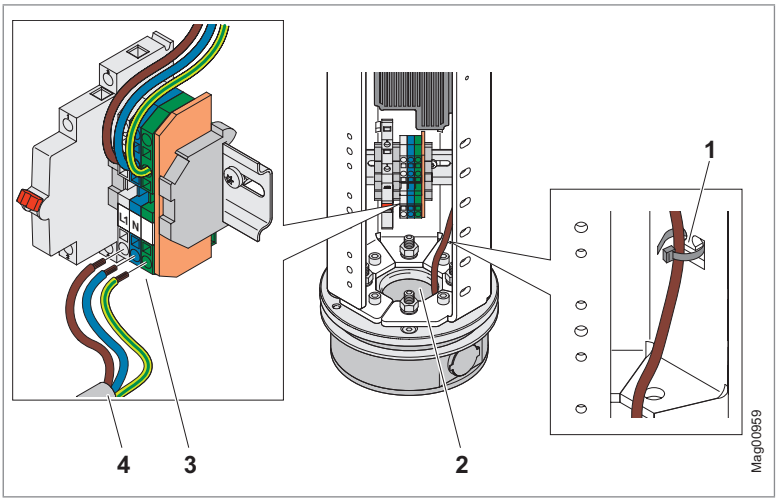

Fig. 59: Placing and connecting the mains cable

1 Links for fixing control cables
2 Threading mains cable and control lines
3 Terminals
4 Mains cable to be connected

8.4 Connecting customer control lines

IMPORTANT!

For connecting the control lines provided by the customer, see separate document "Description of MGC control unit for mSwing (Doc.ID: 5817,0031)".

8.4.1 Connecting emergency opening contacts

↗ Separate wiring diagram and document "Description control unit MGC for mSwing (Doc.ID: 5817,0031)".

Connect fire brigade switches, emergency opening contacts, etc. to the "Emergency open" input. This input has the highest priority. The "Emergency open" input function is superior to all other input functions. As long as +24 V DC are present at this input, the pedestrian gate is in operation.

8.5 Checking the electrical connections

After the electrical installation, check the following points:

- Does the power supply match the specification on the type plate?
- Are the prescribed protective devices installed?
- Is the pedestrian gate connected according to electrical circuit diagram?
- Is the emergency signal transmitter correctly connected?
- Are the customer's signal transmitters and receivers correctly connected?
- Are all screws firmly tightened?
- Have all pedestrian gate covers been properly assembled?

9 Commissioning

9.1 Safety during commissioning

Qualification of personnel

› Technician
› Magnetic MHTM™ FlowMotion® service expert

↗ Page 12, chapter 2.3.2.

Personal protective equipment

Wear the following personal protective equipment:

› Work clothes
› Protective gloves
› Safety shoes.

9.2 Putting the pedestrian gate into operation

IMPORTANT!

Commissioning must be carried out in accordance with the test book. See separate document "Test Book MHTM™ FlowMotion® mSwing (Doc.ID: 5837,0012)".

9.3 Switching the pedestrian gate on and off

NOTICE

Fast restart!

Switching the pedestrian gate on again too fast can lead to damage to the device!

› Wait for at least 10 seconds after switching off the pedestrian gate before you switch the mains power on again.

1. Open the housing. ↗ Page 82, chapter 7.11.
2. Switch the pedestrian gate on or off using the on/off switch.

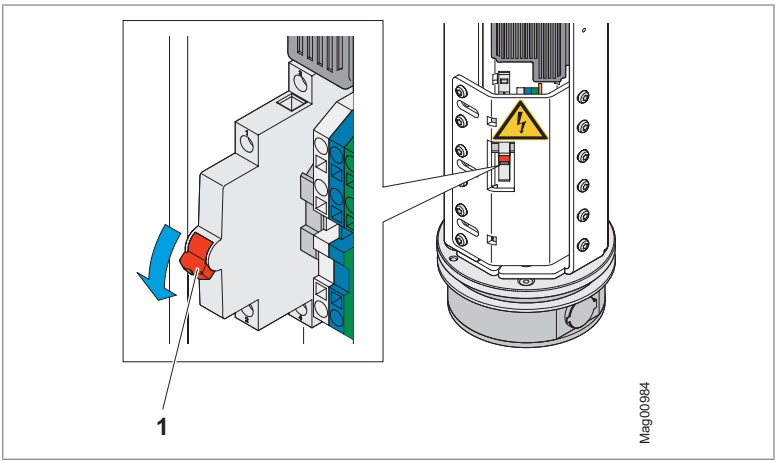

Fig. 60: Switching the mSwing on and off

1 On and off switch, here position "Off"

3. Close housing. ↗ Page 82, chapter 7.11.

9.4 Parameterising the pedestrian gate

IMPORTANT!

For parameterisation see separate document "Description of MGC control unit for mSwing (Doc.ID: 5817,0031)".

10 Test book

The pedestrian gate must be checked at least once a year in accordance with the test book.

The test book "MHTM FlowMotion® mSwing (Doc.ID: 5837.0012)" is included in the scope of delivery.

11 Operation

The operation of the pedestrian gate depends on the connected access-control devices, signal transmitters and signal receivers as well as on the parameterisation of the control unit.

We recommend to create a description for the operation, depending on the connected devices and the parameterisation.

IMPORTANT!

For parameterisation see separate document "Description of MGC control unit for mSwing (Doc.ID: 5817,0031)".

12 Cleaning and maintenance

12.1 Cleaning the pedestrian gate

NOTICE

Aggressive cleaning aids and substances!

Aggressive detergents and consumables may damage or destroy components, electric cables, or the coating of the pedestrian gate.

› Do not use cleaning agents with aggressive ingredients.

Cleaning the blocking element

1. Switch off the power supply and secure against being switched on again.
2. Clean the glass wing with a glass cleaner.
3. Clean the stainless steel bracket with a stainless steel detergent.

Cleaning the pedestrian gate from the outside – except the blocking element

1. Switch off the power supply and secure against being switched on again.
2. Pre-clean surfaces with a damp cloth. Never use wet cleaning cloths.
3. Clean the surface with a mild household cleaner.
4. Carefully clean areas with persistent dirt with spirit.
5. Dry surfaces with a dry cloth.

12.2 Maintenance schedule

The maintenance plan lists all work required to ensure safe, optimum and trouble-free operation of the pedestrian gate.

Interval	Work	Personnel
Monthly	Check emergency function.	Operator
	Check the housing for damage from the outside.	Operator
Every 6 months	Check the attachment of the blocking element.	Technician
	Check function of the external residual current operated device.	Technician
Every 12 months	Check electrical lines for damage.	Technician
	Check if all electrical connections are firm.	Technician
	Check the fastening of the housing.	Technician

Table 12: Maintenance schedule

13 Corrective action

IMPORTANT!

For troubleshooting, see separate document "Description of MGC control unit for mSwing (Doc.ID: 5817,0031)".

14 Spare parts and repair

NOTICE

Wrong and faulty spare parts!

Incorrect or defective spare parts can result in damage, malfunctions or total failure and also impair safety.

› Use only the manufacturer's original spare parts.

Spare parts are available from your authorised dealer. The address can be found on your delivery receipt, invoice or the rear of these operating instructions.

Spare part lists can be obtained on request.

15 Customer service

Our customer service can be contacted for any technical advice. Notices concerning the responsible contact person can be retrieved by telephone, fax, E-mail or via the Internet at any time, refer to manufacturer's address on page 2.

IMPORTANT!

In order to enable fast handling note the data of the type plate such as type, serial number, version etc. before calling.

16 Decommissioning

You disable the pedestrian gate in the following cases:

› The pedestrian gate is installed at a different location.

› The pedestrian gate will be decommissioned for more than 6 months.

If you only want to deactivate the pedestrian gate for a short time, see the "Switching the pedestrian gate on and off" section. ↗ Page 88, chapter 9.3.

16.1 Safety during decommissioning

Qualification of personnel

› Technician

› Magnetic MHTM™ FlowMotion® service expert

↗ Page 12, chapter 2.3.2.

Personal protective equipment

Wear the following personal protective equipment:

› Work clothes

› Protective gloves

› Safety shoes.

16.2 Take the pedestrian gate out of operation

1. Switch off the pedestrian gate. ↗ Page 88, chapter 9.3.
2. Disconnect the pedestrian gate from the power supply.
3. If necessary, dismantle the pedestrian gate.
4. Store pedestrian gate or components properly. ↗ Page 31, chapter 5.4.

17 Disassembly and disposal

17.1 Safety during disassembly and disposal

Qualification of personnel

› Technician
› Electrical specialist
› Magnetic MHTM™ FlowMotion® service expert

↗ Page 12, chapter 2.3.2.

Personal protective equipment

Wear the following personal protective equipment:

› Work clothes
› Protective gloves
› Safety shoes.

17.2 Dismantling and disposing of the pedestrian gate

Prerequisites

› The pedestrian gate is out of order. ↗ Page 93, chapter 16.2.

1. Disassemble the pedestrian gate into individual parts.
2. Recycle parts by type and material. Dispose of non-recyclable materials in an environmentally friendly manner. Observe local and national laws and guidelines.

√ The pedestrian gate is disassembled and disposed of.

EU-Declaration of Conformity

The manufacturer MAGNETIC AUTOCONTROL GmbH hereby declares for the product supplied by him:

Designation	**Pedestrian gate FlowMotion®**
Type	mSwing FMSW_M*
From serial number	11023056

The conformity according to:
Directive 2006/42/EC (Machine directive) amended by **2009/127/EC**
Directive 2014/30/EU (EMC directive)
Directive 2011/65/EU (RoHS Directive)

Applied harmonised standards (or parts hereof):
EN ISO 12100:2010
Safety of machinery – General principles for design – Risk assessment and risk reduction

EN 60204-1:2006/AC:2010
Safety of machinery – Electrical equipment of machines – Part 1: Specifications for general requirements

EN 61000-6-2:2005/AC:2005
Electromagnetic compatibility (EMC) – Part 6-2: Generic standard – Immunity for industrial environments

EN 61000-6-3:2007/A1:2011/AC:2012
Electromagnetic compatibility (EMC) – Part 6-3: Generic standard – Emission standard for residential, commercial and light-industrial environments

EN ISO 13849-1:2008/AC:2009
Safety of machinery – Safety-related parts of control systems – Part 1: General principles for design

EN 60335-2-103:2015
Household and similar electrical appliances – Safety – Part 2-103: Particular requirements for drives for gates, doors and windows

This declaration is not a guarantee of characteristics in the sense of product liability law. The safety regulations of the operating instructions have to be observed.

MAGNETIC AUTOCONTROL GmbH
Grienmatt 20-28
79650 Schopfheim

Documentation Engineer
Mr. Stefan Wellinger

Schopfheim, 12/03/2020
Place and date

Signature

Index

A

Assembling
- Bracket ... 78
- mSwing ... 67

Assembly ... 35
- Testing ... 82

Attachment set
- BSS103 ... 37
- BSSFURA103 ... 37
- BSSKL100 ... 37

B

Base plate
- Alignment ... 42
- Assembly ... 49
- Glueing ... 56

Blocking element
- Assembly ... 75
- Bracket ... 26
- Disassemble ... 75
- Set orientation ... 41
- Wing ... 25

Blocking element length
- Bracket variant ... 22
- Wing variant ... 21

Blocking element orientation
- Determine ... 41

Blocking width
- Bracket variant ... 22
- Wing variant ... 21

Bracket
- Assembly ... 78
- Disassemble ... 81

C

Changes ... 10
Cleaning ... 90
Clearances
- Clearances ... 20

Commissioning ... 88
Connection. Siehe Electrical connection
Control lines
- Connecting ... 86

Corrective action ... 91
Cover ... 25, 26
Customer service ... 92

D

Decommissioning ... 93
Design
- mSwing FMSW_MG (wing variant) ... 25
- mSwing FMSW_MU (bracket variant) ... 26

Dimensions
- mSwing FMSW_MG (wing variant) ... 17
- mSwing FMSW_MU (bracket variant) ... 19

Disassembly ... 94
Disposal ... 94

E

Edge profile ... 25, 26
Electrical connection ... 83
- Technical data ... 23
- Testing ... 87

Emergency opening ... 87
Emissions ... 23
Empty conduits
- Requirements ... 38

End stops ... 71
EU-Declaration of Conformity ... 95

F

Floor plate ... 25, 26
- Alignment ... 41
- Mount on base plate ... 59
- Mount on foundation ... 45

Foundation
- Requirements ... 38
- Set up ... 40

Foundation plan ... 40
Function ... 27

G

Goods receiving department ... 29

H

Housing
- Close ... 82
- Open ... 82

I

Installation 35
Intended use 10

L

Layout for empty conduits 40
Left
  Definition 28

M

Magnetic MHTM™ FlowMotion® service expert 12
Mains cable
  Connecting 85
Maintenance schedule 91
MGC control unit 25, 26
  Technical data 24
Misapplications 10
Modifications 10
Mounting preparation 43
Mounting variants
  Direct mounting 45
  Glue floor plate 60
  Glueing the base plate 56
  Mount base plate 49
  Overview 36
  Plates or interlocking stones 65
Mounting width
  Required for bracket variant 22
  Required for wing variant 21
mSwing position
  Determine 41

N

Notices
  Presentation 8

O

Operating conditions 23
Operation 90
Operator
  Responsibility 11
Outer tube 25, 26

P

Parameterise 89
Passage width
  Bracket variant 22
  Wing variant 21
Personal protective equipment 13
Personnel
  Qualification 12

Q

Qualification
  Personnel 12

R

Reinforcement 40
Reinforcing plate 25, 26
Repair 92
Right
  Definition 28

S

Safety 10
Safety guards
  Install 84
Scope of delivery 33
Spare parts 92
Storage 31
Switching off 88
Switching on 88
Swivel range
  Bracket variant 22
  Wing variant 21

T

Target groups 11
Technical data 17
Test book 89
Threaded pins 25, 26
Transport 30
Type plate 34

U

Unpacking 32

W

Warning Notes
Presentation 8
Wing
Assembly 75
Disassemble..... 77

MAGNETIC AUTOCONTROL GMBH
Grienmatt 20
D-79650 Schopfheim
Germany

Phone +49 7622 695 5
Fax +49 7622 695 802
info@magnetic-germany.com
www.magnetic-access.com

Sales partner

F10044450

Doc.ID: 5817,0032EN
Version 00